SPnT section

Coaxial Subminiature SPnT up to 26.5 GHz

See Page SPnT - 2

High Performances Multiport Switches up to 40 GHz PLATINUM series

Updated

See Page SPnT - 8

Updated

Coaxial SPnT up to 40 GHz - RAMSES series

See Page SPnT - 16

QUICK ACCESS TO THE RIGHT PAGE

Example : **DC-18 GHz, SPnT Zc with SMA connectors**

See page SPnT-16

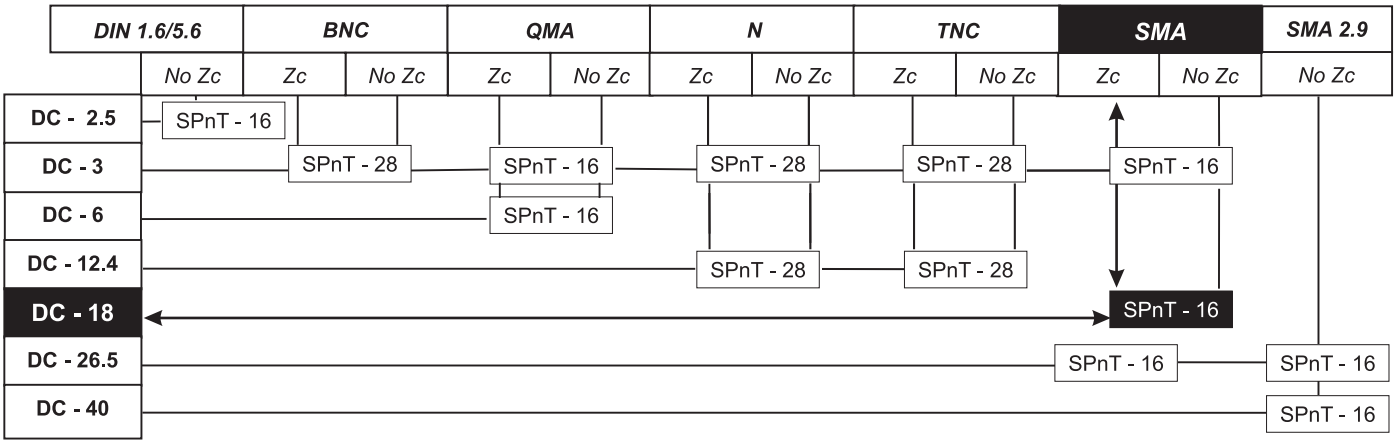

Note : ***Zc*** *: Terminated versions*
No Zc : *Non terminated versions*

Australian Representatives
ROJONE, PTY LTD.
Tel: 02 9829 1555
E: sales@rojone.com.au
www.rojone.com.au

Technical data sheets are available on : ***www.radiall.com***
For more technical information, consult us / E-mail : ***USA : rfswitchusa@radiall.com / Rest of the world : switchingproducts@radiall.com***

SUBMINIATURE SPnT up to 26.5 GHz
SMA - QMA

R591 RADIALL coaxial subminiature switches have a typical operating life exceeding 25 million cycles. Excellent RF & repeatability characteristics along with a guaranteed life of 10 million cycles make these switches ideal for Automated Test Equipment (ATE) and other measurement applications. These miniature switches are also an excellent choice for Mil/Aero applications due to their small size, light weight, as well as outstanding shock and vibration handling capabilities.

PART NUMBER SELECTION

R 5 9 1 . . . . . .

RF Connectors :
- **3** : SMA up to 6 GHz
- **7** : SMA up to 26.5 GHz
- **E** : QMA up to 6 GHz (4)

Type :
- **0** : Normally open
- **2** : Latching, global reset
- **6** : Latching, separated reset (1)

Actuator Voltage :
- **2** : 12 Vdc
- **3** : 28 Vdc

Actuator Terminals :
- **0** : Solder pins
- **5** : Micro-D connector

Options :
- **0** : Without option
- **1** : Positive common
- **2** : Normally open with TTL driver (high level)(2)(3)
- **3** : With suppression diodes
- **4** : With suppression diodes and positive common

Number of positions :
- **4** : 4 positions
- **6** : 6 positions

(1) : Available with "solder pins" models only
(2) : Polarity is not relevant to application for switches with TTL driver
(3) : Suppression diodes are already included with TTL option

(4) : The "QLF" trademark (Quick Lock Formula®) standard applies to QMA and QN series and guaranties the full intermateability between suppliers using this trademark. Using QLF certified connectors also guarantees the specified level of RF performances

Technical data sheets are available on : ***www.radiall.com***
For more technical information, consult us / E-mail : ***USA : rfswitchusa@radiall.com / Rest of the world : switchingproducts@radiall.com***

SUBMINIATURE SPnT up to 26.5 GHz
SMA - QMA

GENERAL SPECIFICATIONS

Operating mode		Normally open		Latching	
Nominal operating voltage (across operating temperature)	Vdc	**12** (10.2 / 13)	**28** (21 / 30)	**12** (10.2 / 13)	**28** (21 / 30)
Coil resistance (+/-10%)	Ohms	48	250	60	285
Operating current at 23°C	mA	250	110	200	98
Average power		See RF Power Rating Chart on **Intro-14**			
TTL input	High Level	2.2 to 5.5 Volts			
	Low Level	0 to 0.8 Volts			
Switching time (max)	ms	10			
Life		10 million cycles			
Connectors		SMA / QMA			
Actuator terminals		**Solder Pins** : double row connector for wrapping, soldering (250°C max / 30 sec), or connecting to 2.54 mm pitch female connector. **9 pin micro-D** receptacle M83513/07-A according to MIL-C-85513.			
Operating temperature range	°C	-40 to +85			
Storage temperature range	°C	-55 to +85			
Sine vibration (According to MIL STD 202, Method 204D, Cond. D)		10-2000 Hz, 20g operating			
Random vibration (According to MIL STD 202, Method 214A, Profile I, Cond. F)		50-2000 Hz, 20.71grms operating			
Shock (According to MIL STD 202, Method 213B, Cond. C)		100g / 6 ms, ½ sine operating			

RF PERFORMANCES

Connectors	Frequency Range GHz		V.S.W.R. (max)	Insertion Loss (max) dB	Isolation (min) dB	Impedance Ohms
QMA / SMA	DC – 6	DC – 3	1.20	0.20	80	50
		3 – 6	1.30	0.30	70	
SMA	DC – 26.5	DC – 3	1.20	0.20	80	50
		3 – 8	1.30	0.30	70	
		8 – 12.4	1.40	0.40	60	
		12.4 – 18	1.50	0.50	60	
		18 – 26.5	1.60	0.60	55	

SUBMINIATURE SPnT up to 26.5 GHz
SMA - QMA

TYPICAL RF PERFORMANCES

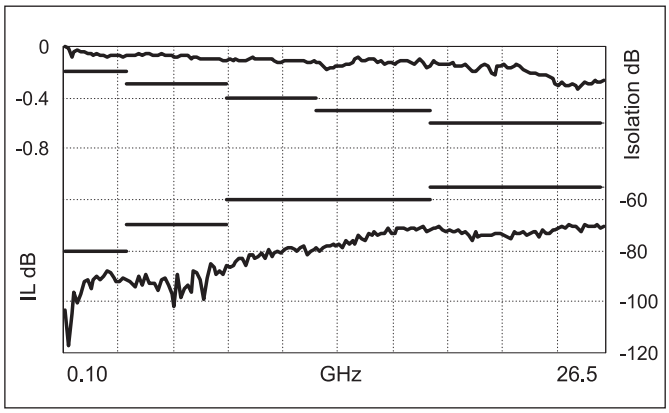

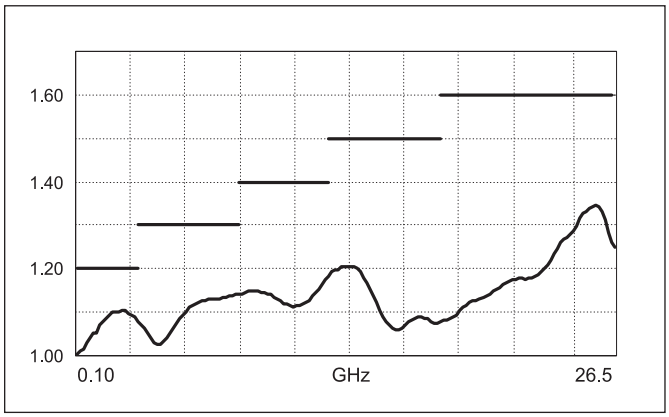

TYPICAL OUTLINE DRAWING (1)

Connectors	SMA	QMA
A max (mm/inches)	7.4/0.291	10.8/0.425

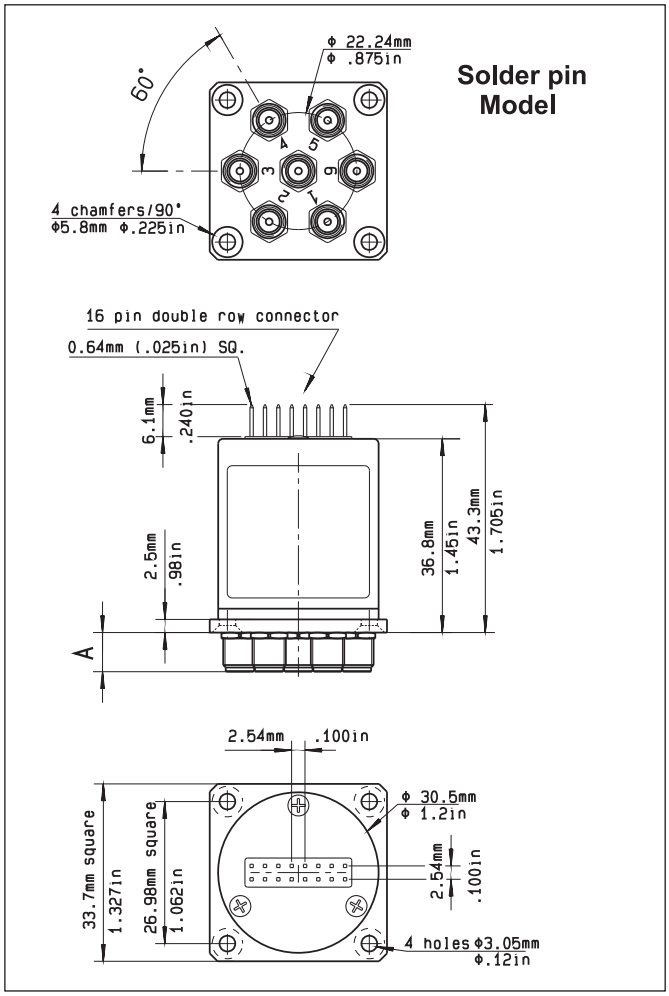

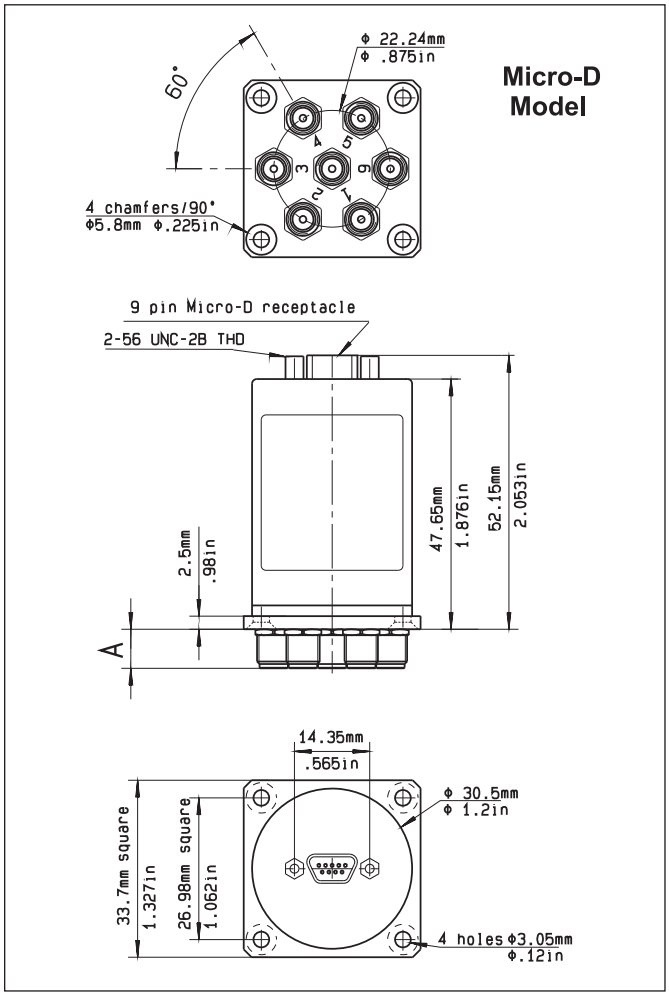

(1) : For SP4T, way 3 and 6 not connected

Technical data sheets are available on : ***www.radiall.com***
For more technical information, consult us / E-mail : ***USA : rfswitchusa@radiall.com / Rest of the world : switchingproducts@radiall.com***

R591 SERIES ELECTRICAL SCHEMATICS

NORMALLY OPEN WITHOUT OPTION
R591 -0- -0-

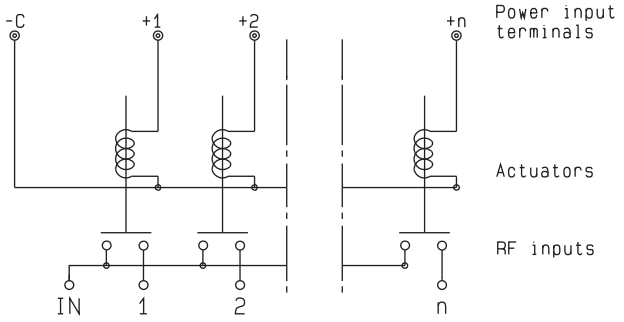

NORMALLY OPEN WITH POSITIVE COMMON
R591 -0- -1-

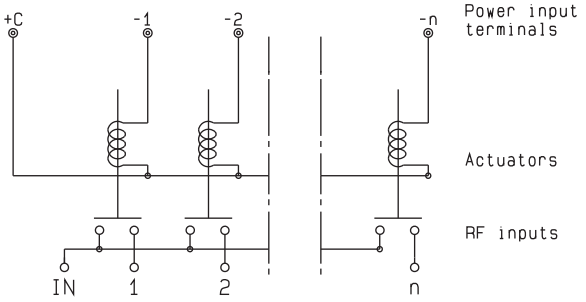

NORMALLY OPEN WITH TTL DRIVE
R591 -0- -2-

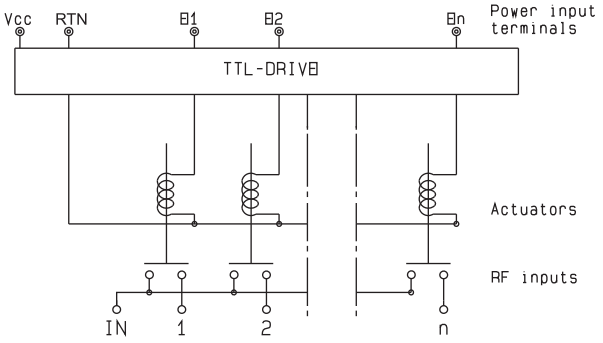

NORMALLY OPEN WITH SUPPRESSION DIODES
R591 -0- -3-

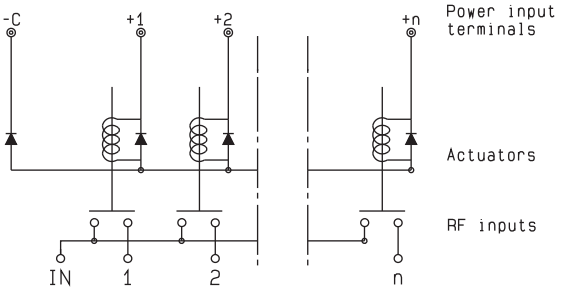

NORMALLY OPEN WITH POSITIVE COMMON AND SUPPRESSION DIODES
R591 -0- -4-

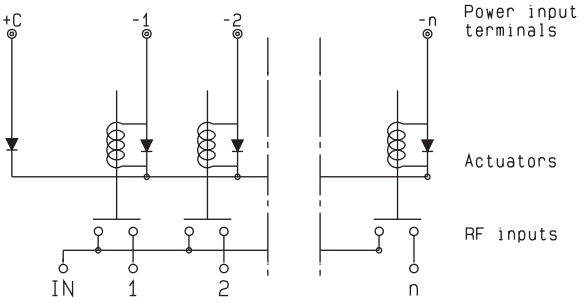

LATCHING GLOBAL RESET WITHOUT OPTION
R591 -2- -0-

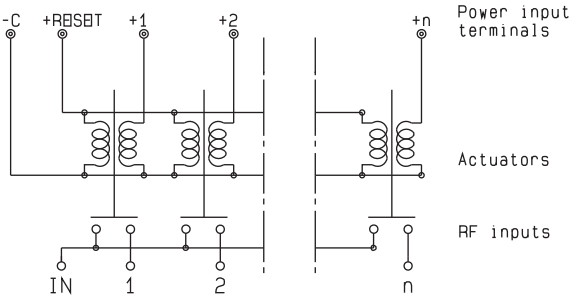

SPnT

Technical data sheets are available on : ***www.radiall.com***
For more technical information, consult us / E-mail : ***USA : rfswitchusa@radiall.com / Rest of the world : switchingproducts@radiall.com***

R591 SERIES ELECTRICAL SCHEMATICS

LATCHING GLOBAL RESET WITH POSITIVE COMMON
R591 -2- -1-

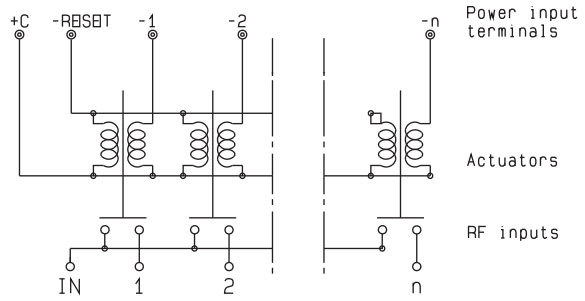

LATCHING GLOBAL RESET WITH SUPPRESSION DIODES
R591 -2- -3-

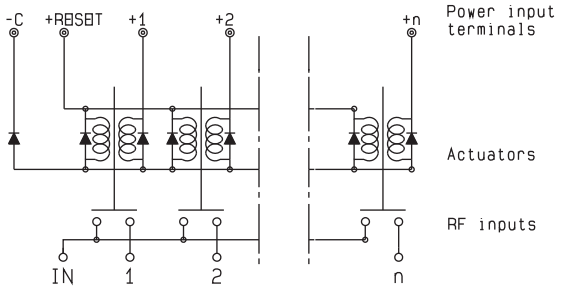

LATCHING GLOBAL RESET WITH POSITIVE COMMON AND SUPPRESSION DIODES
R591 -2- -4-

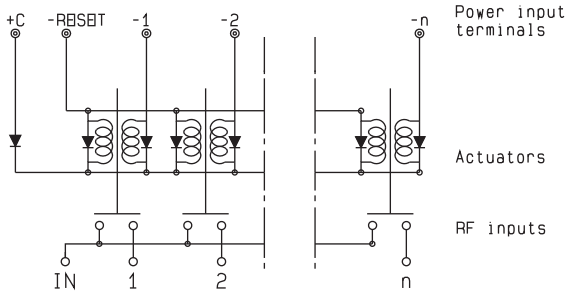

LATCHING SEPARATED RESET WITHOUT OPTION
R591 -6- -0-

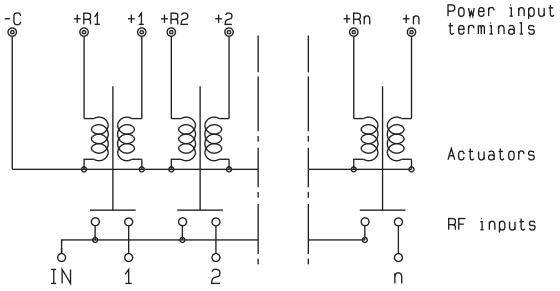

LATCHING SEPARATED RESET WITH POSITIVE COMMON
R591 -6- -1-

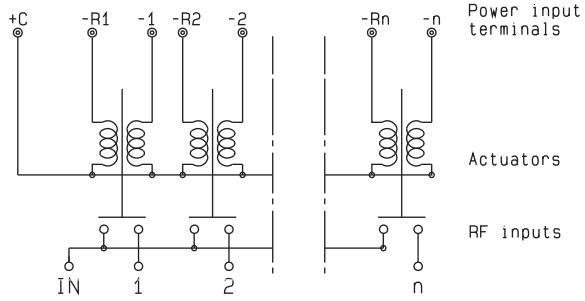

LATCHING SEPARATED RESET WITH SUPPRESSION DIODES
R591 -6- -3-

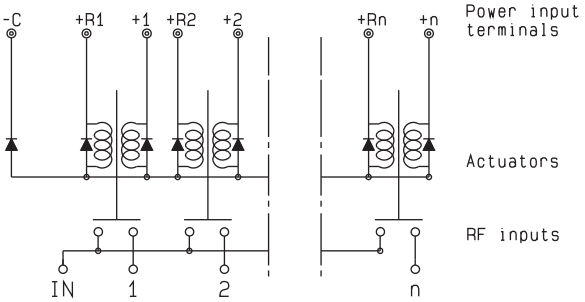

Technical data sheets are available on : ***www.radiall.com***
For more technical information, consult us / E-mail : ***USA : rfswitchusa@radiall.com / Rest of the world : switchingproducts@radiall.com***

R591 SERIES ELECTRICAL SCHEMATICS

LATCHING SEPARATED RESET WITH POSITIVE COMMON AND SUPPRESSION DIODES
R591 -6- -4-

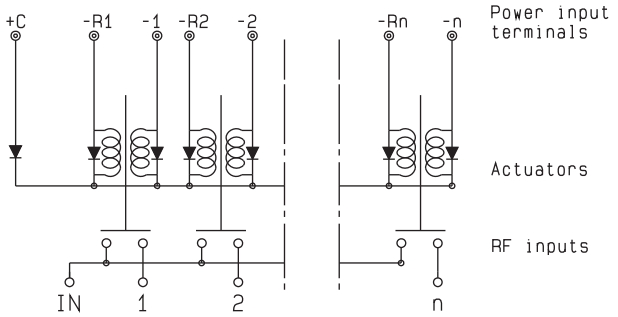

PIN IDENTIFICATION

Solder pins (top view)*

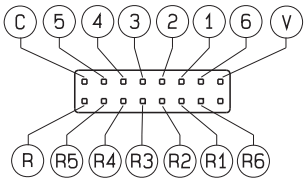

9 pin Micro-D (top view)

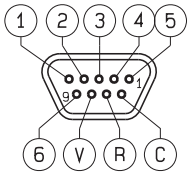

* : Compatible with 2.54 mm pitch double row 16 contact female connector

- NC : not connected
- For SP4T, ways 3 and 6 not connected
- Pin R = reset of all paths

Type		C	V	1	2	3	4	5	6	R	R1	R2	R3	R4	R5	R6
Normally open	negative common	-C	NC	+1	+1	+3	+4	+5	+6	NC	NC	NC	NC	NC	NC	NC
	positive common	+C	NC	-1	-1	-3	-4	-5	-6	NC	NC	NC	NC	NC	NC	NC
Latching global reset	negative common	-C	NC	+1	+1	+3	+4	+5	+6	+reset	NC	NC	NC	NC	NC	NC
	positive common	+C	NC	-1	-1	-3	-4	-5	-6	-reset	NC	NC	NC	NC	NC	NC
Latching individual reset	negative common	-C	NC	+1	+1	+3	+4	+5	+6	NC	+res.1	+res.2	+res.3	+res.4	+res.5	+res.6
	positive common	+C	NC	-1	-1	-3	-4	-5	-6	NC	-reset	-res.2	-res.3	-res.4	-res.5	-res.6
Normally open with TTL drive		GND or RTN	Vcc	E1	E2	E3	E4	E5	E6	NC	NC	NC	NC	NC	NC	NC

Technical data sheets are available on : ***www.radiall.com***
For more technical information, consult us / E-mail : ***USA : rfswitchusa@radiall.com / Rest of the world : switchingproducts@radiall.com***

HIGH PERFORMANCES MULTIPORT SWITCHES

PLATINUM Series / SPnT terminated up to 40 GHz

Radiall's PLATINUM SERIES switches are optimised to perform at a high level over an extended life span. With outstanding RF performances, and a guaranteed Insertion Loss repeatability of 0.03 dB over a life span of 10 million switching cycles. PLATINUM SERIES switches are perfect for automated test and measurement equipment, as well as signal monitoring devices

PART NUMBER SELECTION

R 5 9 4 . . 3 . . 7 .

RoHS COMPLIANT

Updated

RF Connectors :
- **3** : SMA up to 6 GHz
- **4** : SMA up to 20 GHz
- **F** : SMA up to 26.5 GHz
- **8** : SMA 2.9 up to 40 GHz (1)

Type :
- **4** : Latching + Self cut-off without indicators
- **7** : Latching + Self cut-off + Auto Reset + indicators

Number of positions :
- **4** : 4 positions
- **6** : 6 positions

Options :
- **1** : Positive common (without TTL)
- **2** : TTL/5V logic with 24 Vdc supply Type “7” only

Documentation :
- **-** : Certificate Of Conformity
- **C** : Calibration certificate
- **R** : Calibration certificate + RF curves

Actuator Terminal :
- **7** : HE 10 receptacle, delivered with 750 mm (30 inches) ribbon cable + HE 10 connector

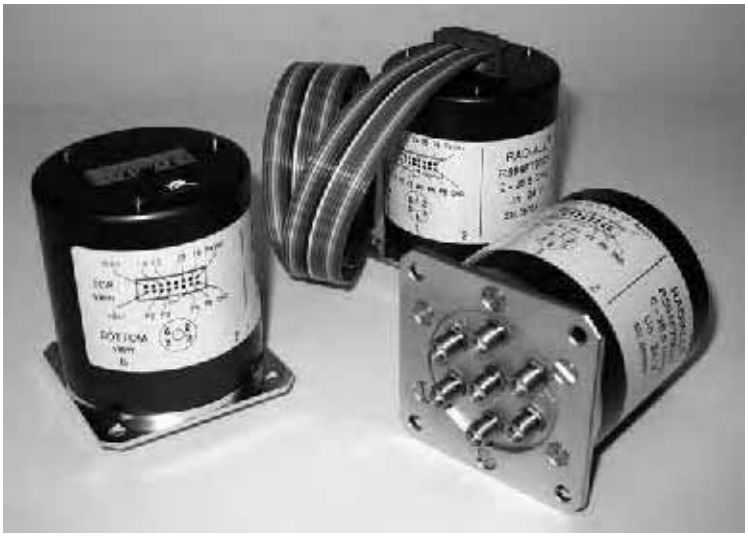

(1) : Connector SMA 2.9 is equivalent to “K connector®”, registered trademark of Anritsu

Technical data sheets are available on : ***www.radiall.com***
For more technical information, consult us / E-mail : ***USA : rfswitchusa@radiall.com / Rest of the world : switchingproducts@radiall.com***

RF PERFORMANCES

Part Number		R5943.34.7 R5943.36.7	R5944.34.7 R5944.36.7	R594F.34.7 R594F.36.7	R5948.34.7 R5948.36.7
Frequency range	GHz	DC to 6	DC to 20	DC to 26.5	DC to 40
Impedance	Ω	50			
Insertion loss (max)	dB	0.3 + 0.015 x frequency (GHz)			
Isolation (min)	dB	100	DC to 6 GHz : 100 6 to 12.4 GHz : 90 12.4 to 20 GHz : 80	DC to 6 GHz : 100 6 to 12.4 GHz : 90 12.4 to 20 GHz : 80 20 to 26.5 GHz : 70	DC to 6 GHz : 100 6 to 12.4 GHz : 90 12.4 to 20 GHz : 80 20 to 26.5 GHz : 70 26.5 to 40 GHz : 60
V.S.W.R. (max)		1.20	DC to 6 GHz : 1.20 6 to 12.4 GHz : 1.35 12.4 to 18 GHz : 1.45 18 to 20 GHz : 1.70	DC to 6 GHz : 1.20 6 to 12.4 GHz : 1.35 12.4 to 18 GHz : 1.45 18 to 26.5 GHz : 1.70	DC to 6 GHz : 1.20 6 to 12.4 GHz : 1.35 12.4 to 18 GHz : 1.45 18 to 26.5 GHz : 1.70 26.5 to 40 GHz : 1.90
Repeatability (measured at 25°C)	dB	0.03 max			0.05 max

TYPICAL RF PERFORMANCES

Insertion Loss and Isolation

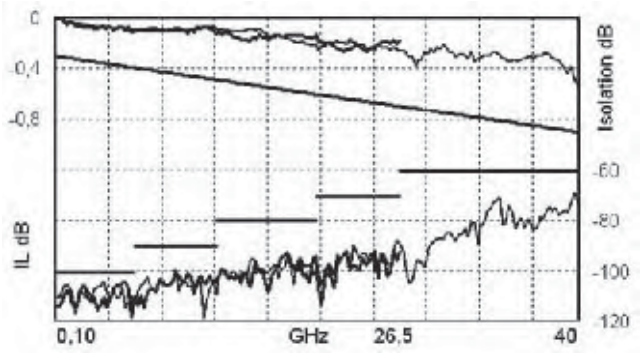

V.S.W.R.

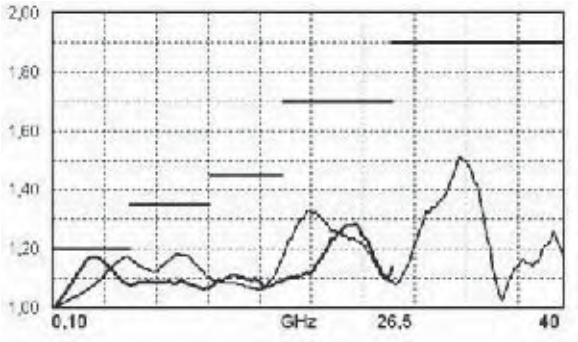

: 26.5 GHz model with **SMA /** : 40 GHz model with **SMA 2.9**

SPnT

Technical data sheets are available on : ***www.radiall.com***
For more technical information, consult us / E-mail : ***USA : rfswitchusa@radiall.com / Rest of the world : switchingproducts@radiall.com***

ADDITIONAL SPECIFICATIONS

Operating mode		**Latching**
Nominal operating voltage (across operating temperature)	Vdc	**24** (20 to 32)
Coil resistance (±10%)	Ω	120
Nominal operating current at 23°C	mA	200
Maximum stand-by current	mA	50
Average power		RF path Cold switching : see power rating chart on SPnT-15 Hot switching : 1 Watt CW
		Internal terminations : 1 Watt average into 50 Ω
TTL input	High level	3 to 7 V : 1.4 mA max at Vcc max and Vinput 3.85 Vdc
	Low level	0 to 0.8 V
Indicator specifications		Maximum withstanding voltage : 60 V Maximum current capacity : 150 mA Maximum "ON" resistance : 2.5 Ω Minimum "OFF" resistance : 100 MΩ
Switching time (max)	ms	15
Life (min) **for**	SMA	10 million cycles
	SMA 2.9	2 million cycles
Connectors		SMA – SMA 2.9
Actuator terminals		HE10 ribbon receptacle
Weight (max)	g	230

ENVIRONMENTAL SPECIFICATIONS

Operating temperature range	-25°C to +75°C
Storage temperature range	-55°C to +85°C
Temperature cycling (MIL-STD-202 , Method 107D , Cond.A)	-55°C to +85°C (10 cycles)
Vibration (MIL STD 202 , Method 204D , Cond.D)	10-2000 Hz , 10g operating
Shock (MIL STD 202 , Method 213B , Cond.C)	50g / 6 ms , ½ sine operating
Moisture resistance (MIL STD 202 , Method 106E , Cond.E)	65°C, 95% RH, 10 days
Altitude storage (MIL STD 202 , Method 105C , Cond.B)	50,000 feet (15,240 meters)
RFI (MIL STD 1344 , Method 3008 or IEC 61726)	55 dB at 20 GHz
Magnetic field	< 5.10^{-5} gauss at 1 meter

ELECTRONIC POSITION INDICATORS

This option is not available with type 4.

The electronic position indicators utilise photo-MOS transistors which are driven by the mechanical position of the RF paths moving elements. The circuitry consists of a common which can be connected to an output corresponding to selected RF path. If one or several RF paths are closed, the corresponding indicators are connected to the common. The photo-MOS transistors are configured for AC and/or DC operation. The electronic position indicators require the supply (20 to 32 VDC) to be connected to pin 1 and ground connected to pin 15.

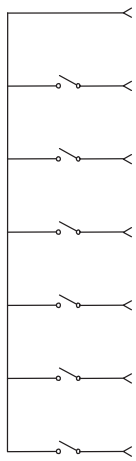

Pin number	Function
2	Indicator Common
4	Indicator RF path 1
6	Indicator RF path 2
8	Indicator RF path 3
10	Indicator RF path 4
12	Indicator RF path 5
14	Indicator RF path 6

Ways 1 and 4 are not connected for SP4T switches.

DRIVING THE SWITCH

Each RF path is driven independently. Each path can be closed or open by applying ground to the corresponding "open" or "close" pin.

Type 4 : without TTL and without indicator.

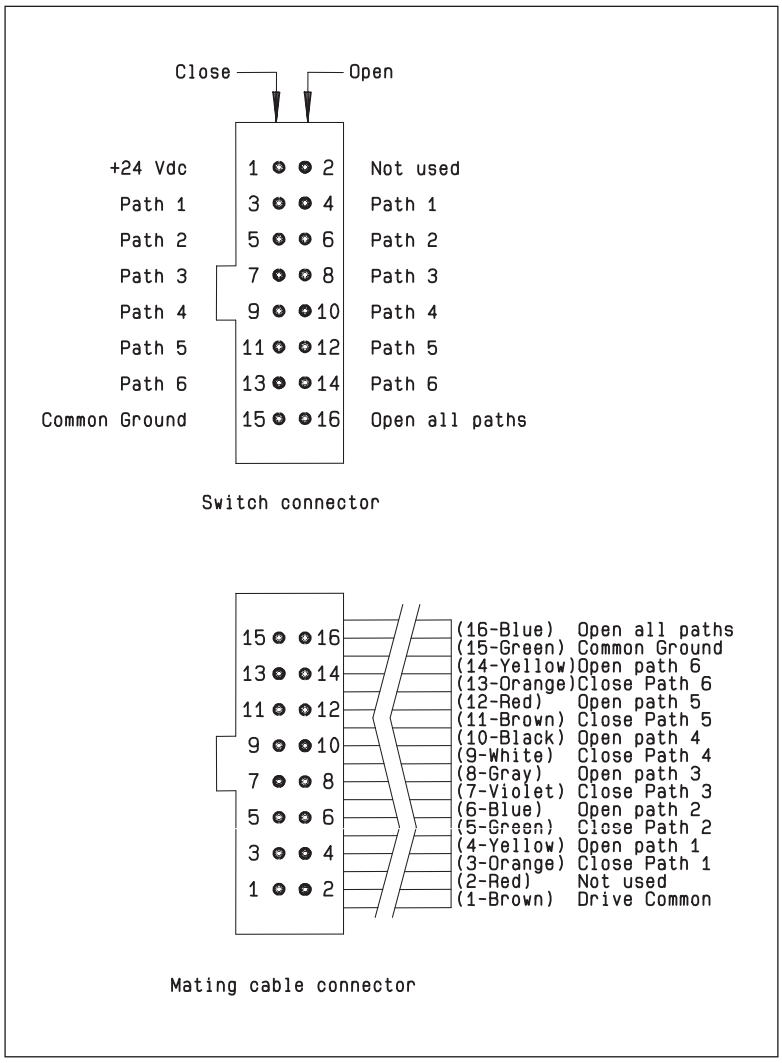

Standard drive

- Connect pin 15 to ground.
- Connect pin 1 to supply (+20 VDC to +32 VDC).
- Select desired RF path by applying ground to the corresponding "close" pin (Ex: ground pin 3 to close RF path 1).
- To open desired RF path connect ground to the corresponding "open" pin (Ex: ground pin 4 to open RF path 1).
- To open all RF paths, first ensure that all RF path "close" pins are disconnected from ground. To complete the operation, connect pin 16 to ground.

Make-Before-Break

Make-Before-Break switching can be accomplished by closing the new RF path before opening the previously selected RF path. To complete the operation, close the new RF port. A minimum of 15 ms must be allowed before opening the previously selected RF port.

Ways 1 and 4 are not connected for SP4T switches.

Type 7 : with TTL (option "2") /without TTL (option "1") and indicators.

Each RF path can be closed by applying Ground or TTL "High" for option 2 to the corresponding "drive" pin. In general, except for Make-Before-Break drive, all other RF paths are simultaneously opened by internal logic.

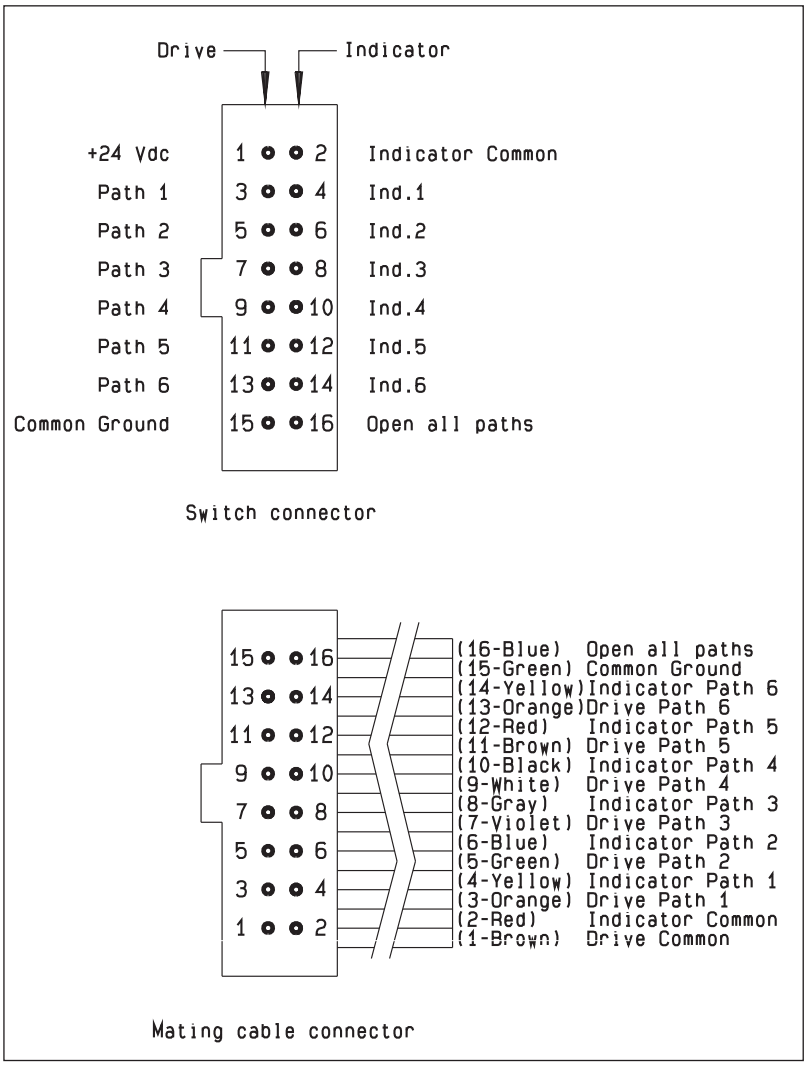

Ways 1 and 4 are not connected for SP4T switches.

Standard drive option "1"

- Connect pin 15 to ground.
- Connect pin 1 to supply (+20 VDC to +32 VDC)
- Select (close) desired RF path by applying Ground to the corresponding "drive" pin (Ex: apply Ground to pin 3 to close RF path 1).
- To select another path, ensure that all unwanted RF path "drive" pins are disconnected from Ground (to prevent multiple RF path engagement). Apply Ground to the "drive" pin which corresponds to the desired RF path.
- To open all RF paths, ensure that all RF path "drive" pins are disconnected from Ground. Complete the operation by applying Ground to pin 16.

TTL drive option "2"

- Connect pin 15 to ground.
- Connect pin 1 to supply (+20 VDC to +32 VDC)
- Select (close) desired RF path by applying TTL "High " to the corresponding "drive" pin (Ex: apply TTL "High" to pin 3 to close RF path 1).
- To select another path, ensure that all unwanted RF path "drive" pins are in TTL "Low" position (to prevent multiple RF path engagement). Apply TTL "High" to the "drive" pin which corresponds to the desired RF path
- To open all RF paths, ensure that all RF path "drive" pins are in TTL "Low" position. Complete the operation by applying TTL "High" to pin 16.

Break-Before-Make

Open the undesired RF path. After 15 ms (minimum), close the new RF port.

Make-Before-Break

Ensure that the previously selected RF path "drive" is connected to Ground (or TTL "High" for option "2", then close the new RF path.

TYPICAL OUTLINE DRAWING

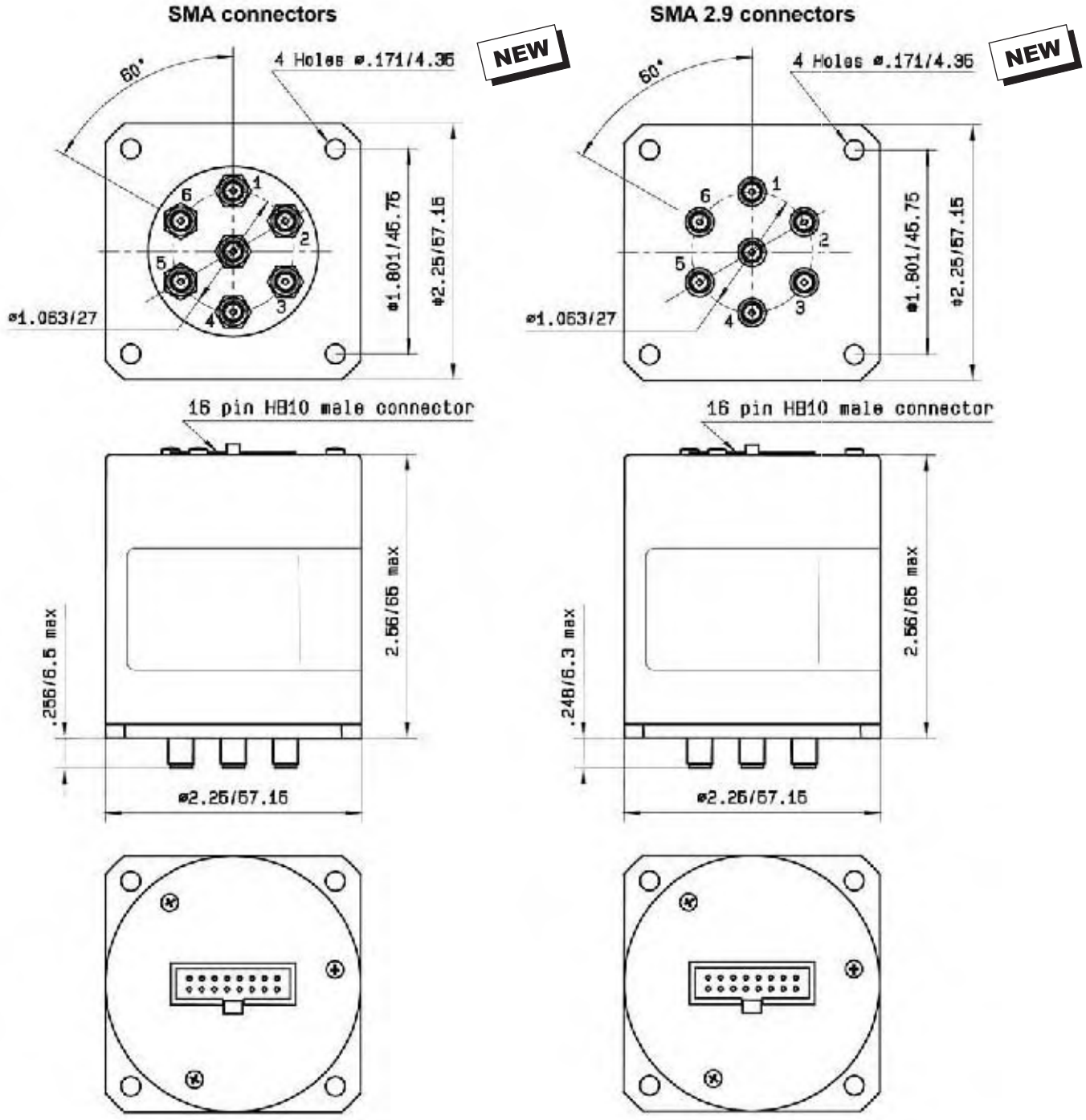

Ways 1 and 4 are not connected for SP4T

Technical data sheets are available on : ***www.radiall.com***
For more technical information, consult us / E-mail : ***USA : rfswitchusa@radiall.com / Rest of the world : switchingproducts@radiall.com***

POWER RATING CHART

This graph is based on the following conditions :

- Ambient temperature : +25°C
- Sea level
- V.S.W.R : 1 and cold switching

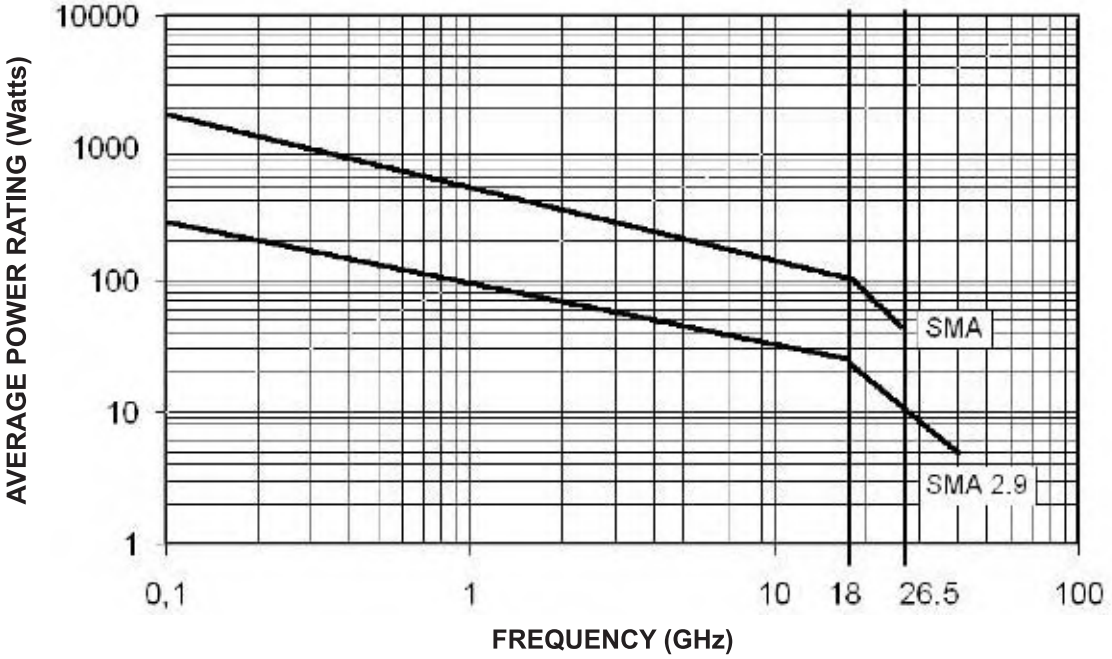

DERATING FACTOR VERSUS VSWR

The average power input must be reduced for load V.S.W.R above 1:1

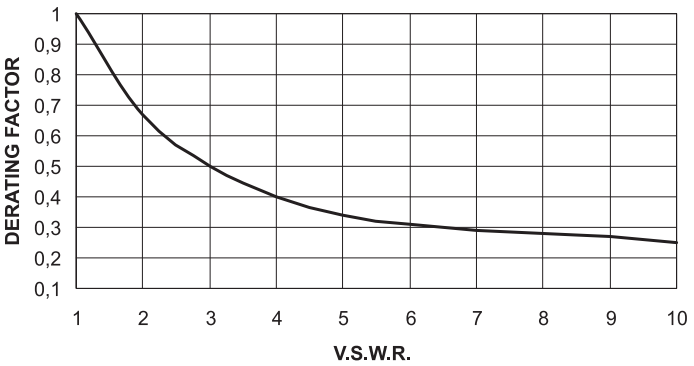

SPnT

PART NUMBER SELECTION

R 5 7 . . . . . .

Model :
3 : Without 50 Ω termination
4 : With 50 Ω termination

RF Connectors :
3 : SMA up to 3 GHz
E : QMA up to 6 GHz (4)(5)(10)
4 : SMA up to 18 GHz
7 : SMA 2.9 up to 26.5 GHz (4)(5)
F : SMA up to 26.5 GHz (4)(6)
8 : SMA 2.9 up to 40 GHz (4)(11)
9 : DIN 1.6/5.6 up to 2.5 GHz (4)(5)

Type :
0 : Normally open
1 : Normally open + I.C.
2 : Latching
3 : Latching + I.C.
4 : Latching + S.C.O. (1)(4)
5 : Latching + S.C.O.+ I.C. (1)(4)
8 : Latching + S.C.O.+ A.R. (1)
9 : Latching + S.C.O.+ I.C. + A.R. (1)

Actuator Voltage :
2 : 12 Vdc
3 : 28 Vdc

Actuator Terminals :
0 : Solder pins
5 : D-Sub connector

Options :
0 : Without option
1 : Positive common (2)(7)
2 : Compatible TTL driver (high level)(1)(9)
3 : With suppression diodes
4 : With suppression diodes and positive common (2)(7)
8 : BCD driver TTL compatible (high level)(1)(3)(8)(9)

Number of Positions :
3 : 3 Positions
4 : 4 Positions
5 : 5 Positions
6 : 6 Positions
7 : 7 Positions
8 : 8 Positions
9 : 9 Positions
0 : 10 Positions
1 : 11 Positions
2 : 12 Positions

I.C. : Indicator contact / S.C.O. : Self Cut-Off / A.R. : Auto Reset.
(1) : These models are already equiped with suppression diodes.
(2) : Standard products are equiped with negative common.
(3) : Latching BCD driver enables also a global reset through driver code 0000 (see BCD logic coding page Intr-11).
(4) : Available only up to 6 positions.
(5) : Model "3" only.
(6) : Model "4" only.
(7) : Option not available for type 4,5,8 & 9.
(8) : Option available only with type 0,1,8 & 9.
(9) : Polarity is not relevant to application for switches with TTL driver

SPnT

Type 2, 3, 4 & 5 :
- Latching models have a RESET pin which commands the reset of all positions. This command should be used before switching from one position to another. If not, two positions will be set at the same time.
Note : During the RESET operation the current is : Nominal operating current x number of positions.

Type 8, 9 :
- Latching models with AUTOMATIC RESET are available; these products have an internal SET/RESET circuit which automatically resets all the non-selected positions and sets the desired position. This option simplifies the use of latching switches by suppressing the RESET command in switching sequence.
An electronic circuit supplies successively groups of 2 or 3 actuators, in order to limit the maximum current.
The current with this option is the total current of 2 or 3 reset coils at the same time (see table and switching sequence on following page).
Example : During the AUTOMATIC RESET operation, at 28V, 4 position switch has temporarily a consumption of only 250 mA, during 40 ms maximum.

(10) : The "QLF" trademark (Quick Lock Formula®) standard applies to QMA and QN series and guaranties the full intermateability between suppliers using this trademark. Using QLF certified connectors also guarantees the specified level of RF performances

(11) : Connector SMA 2.9 is equivalent to "K connector®", registered trade mark of Anritsu

Technical data sheets are available on : ***www.radiall.com***
For more technical information, consult us / E-mail : ***USA : rfswitchusa@radiall.com / Rest of the world : switchingproducts@radiall.com***

SWITCHING SEQUENCE

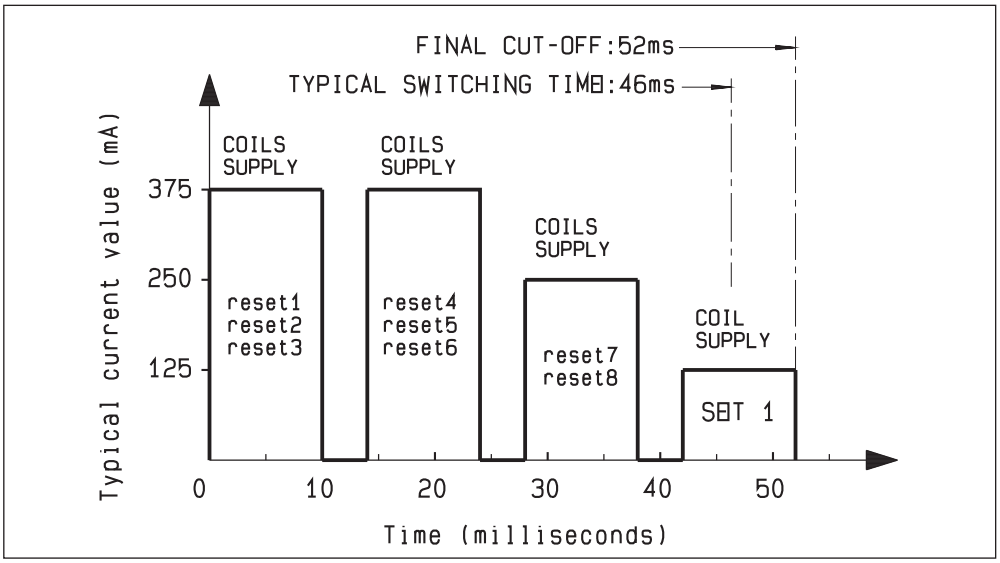

Operating total current at 23 °C (mA) SPnT LATCHING				
Number of positions	12 Volts		28 Volts	
	Manual Reset	Automatic Reset	Manual Reset	Automatic Reset
3 to 4	**320 x n**	640	**125 x n**	250
5 to 8	**320 x n**	960	**125 x n**	375
9 to 12	**320 x n**	1280	**125 x n**	500

n = number of positions

AVAILABILITY OF OPTIONS ACCORDING TO BOTH TYPE AND NUMBER OF POSITIONS

Type	Number of positions	Available Options
0 or 1	**3 to 12**	0 - 1 - 2 - 3 - 4 - 8
2 or 3	**3 to 6**	0 - 1 - 2 - 3 - 4
	7 to 12	0 - 1 - 3 - 4
4 or 5	**3 to 6**	0 - 2
	7 to 12	Not available
8 or 9	**3 to 12**	0 - 2 - 8

Technical data sheets are available on : ***www.radiall.com***
For more technical information, consult us / E-mail : ***USA : rfswitchusa@radiall.com / Rest of the world : switchingproducts@radiall.com***

ADDITIONAL SPECIFICATIONS

SMA Connector						
Number of positions	Frequency Range GHz		V.S.W.R. (max)	Insertion Loss (max) dB	Isolation (min) dB	Impedance Ohms
3 to 6	DC - 3 DC - 18 DC - 26.5	DC - 3	1.20	0.20	80	50
		3 - 8	1.30	0.30	70	
		8 - 12.4	1.40	0.40	60	
		12.4 - 18	1.50	0.50	60	
		18 – 26.5	1.70	0.70	50	
7 to 8	DC - 3 DC - 18	DC - 3	1.20	0.20	80	50
		3 - 8	1.30	0.30	70	
		8 - 12.4	1.40	0.40	60	
		12.4 - 16	1.50	0.55	60	
		16 - 18	1.60	0.60	60	
9 to 10	DC - 3 DC - 18	DC - 3	1.20	0.20	80	50
		3 - 8	1.30	0.30	70	
		8 - 12.4	1.40	0.40	60	
		12.4 - 15.5	1.50	0.50	60	
		15.5 - 18	1.70	0.70	55	
11 to 12	DC - 3 DC - 12.4	DC - 3	1.20	0.20	80	50
		3 - 8	1.40	0.35	70	
		8 - 12.4	1.80	0.70	60	

SMA 2.9 Connector						
Number of positions	Frequency Range GHz		V.S.W.R. (max)	Insertion Loss (max) dB	Isolation (min) dB	Impedance Ohms
3 to 6		DC - 6	1.30	0.20	70	50
	DC - 26.5	6 - 12.4	1.40	0.40	60	
		12.4 - 18	1.50	0.50	60	
	DC - 40	18 - 26.5	1.70	0.70	55	
		26.5 - 40	2.20	1.10	50	

1.6/5.6 Connector						
Number of positions	Frequency Range GHz		V.S.W.R. (max)	Insertion Loss (max) dB	Isolation (min) dB	Impedance Ohms
3 to 6	DC - 2.5	DC - 1	1.30	0.20	80	75
		1 - 2.5	1.40	0.30	70	

QMA Connector						
Number of positions	Frequency Range GHz		V.S.W.R. (max)	Insertion Loss (max) dB	Isolation (min) dB	Impedance Ohms
3 to 6	DC - 6	DC - 3	1.20	0.20	80	50
		3 - 6	1.30	0.30	70	

See pages SPnT-19, SPnT-20, SPnT-21, SPnT-22 and SPnT-23 for typical RF performances

ADDITIONAL SPECIFICATIONS

Operating mode		**Normally open**		**Latching**	
Nominal operating voltage (across operating temperature)	Vdc	**12** (10.2 to 13)	**28** (24 to 30)	**12** (10.2 to 13)	**28** (24 to 30)
Coil resistance (±10%)	Ω	47.5	275	See page **SPnT-17**	
Nominal operating current at 23°C	mA	250	102		
Average power		See RF Power rating chart page Intro-13			
TTL input	High level	2.2 to 5.5 V (TTL option) / 3.5 to 5.5 (BCD option)			
	Low level	0 to 0.8 V (TTL option / 0 to 1.5 V (BCD option)			
Indicator rating		1 W / 30 V / 100 mA			
Switching time (max)	ms	15 ms For automatic reset models SP3T to SP6T : 40 ms SP7T to SP12T : 55 ms			
Life (min) **for**	connectors	SMA - QMA		SMA 2.9 – 1.6/5.6	
	non terminated SP3 to 6T (R573 serie)	5 million cycles		2 million cycles	
	terminated SP3 to 6T (R574 serie)	2 million cycles			
	SP7T to 12T (all models)				
Connectors		SMA – QMA - SMA 2.9 – 1.6/5.6			
Actuator terminals		Solder pins or male 25 pin D-Sub connector			
Operating temperature range	DIN 1.6/5.6	-25°C to +70°C			
	SMA – QMA - SMA 2.9	-40°C to +85°C			
Storage temperature range	DIN 1.6/5.6	-40°C to +85°C			
	SMA – QMA - SMA 2.9	-55°C to +85°C			
Vibration (MIL STD 202, method 204D, Cond. D)		10-2000 Hz, 20g operating for SP3 to 8T, survival for SP7 to 12T			
Shock (MIL STD 202, method 213B, Cond. C)		100g, 6 ms, ½ sine operating for SP3 to 8T, survival for SP7 to 12T			

R573 AND R574 TYPICAL RF PERFORMANCES

Example : Non terminated SP6T QMA up to 6 GHz

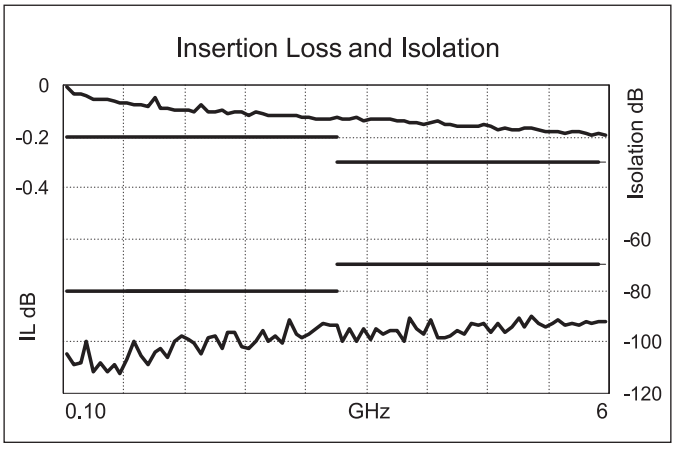

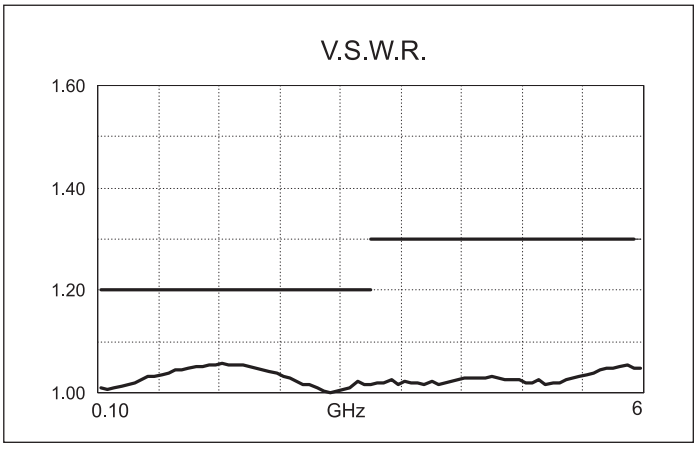

Technical data sheets are available on : ***www.radiall.com***
For more technical information, consult us / E-mail : ***USA : rfswitchusa@radiall.com / Rest of the world : switchingproducts@radiall.com***

Example : Non terminated SP6T SMA up to 18 GHz

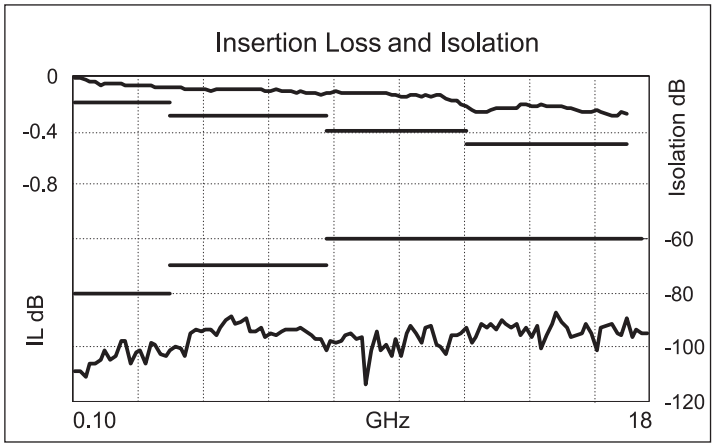

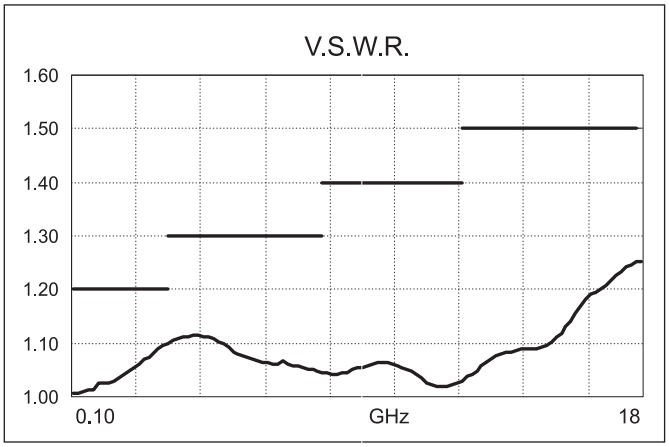

Example : Non terminated SP6T SMA 2.9 up to 26.5 GHz

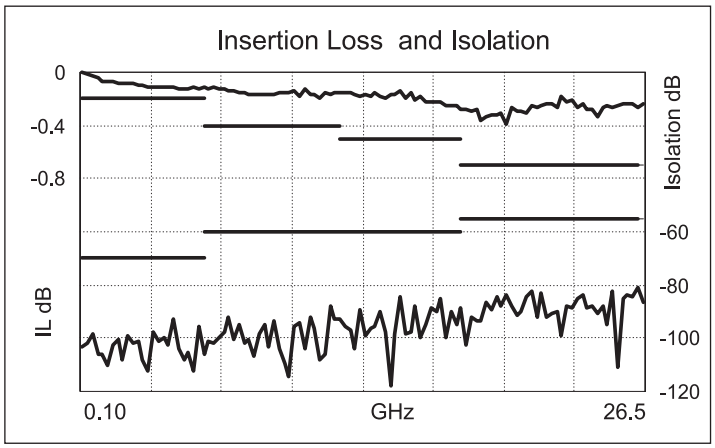

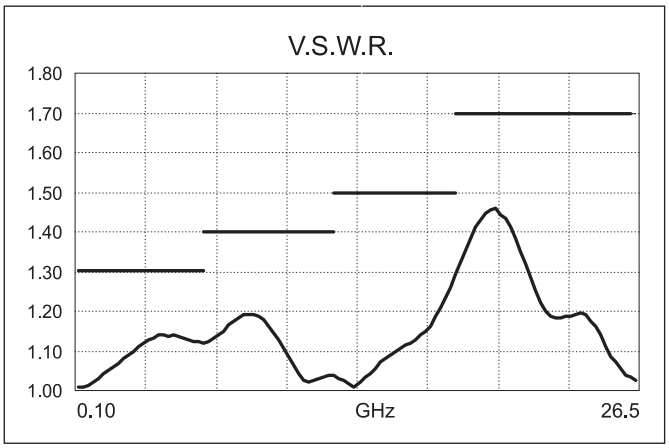

Example : Non terminated SP6T SMA 2.9 up to 40 GHz

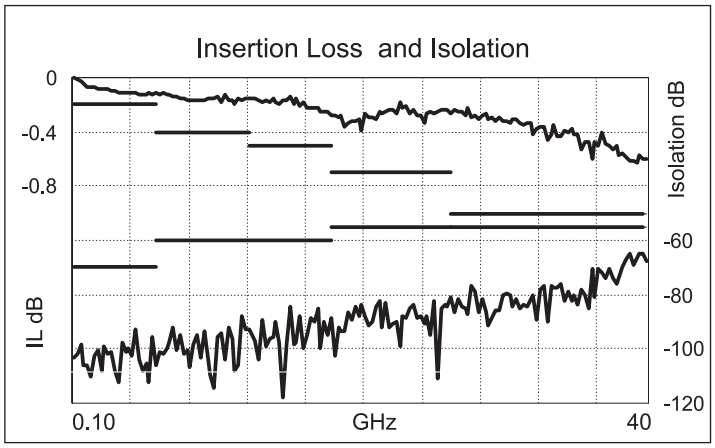

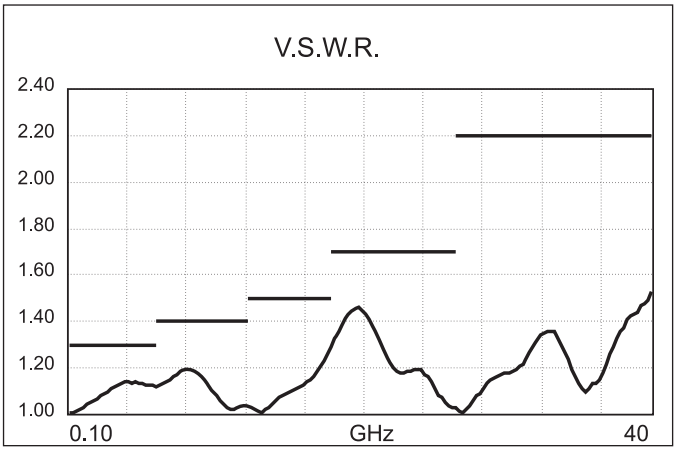

Technical data sheets are available on : ***www.radiall.com***
For more technical information, consult us / E-mail : ***USA : rfswitchusa@radiall.com / Rest of the world : switchingproducts@radiall.com***

Example : Terminated SP6T SMA up to 18 GHz

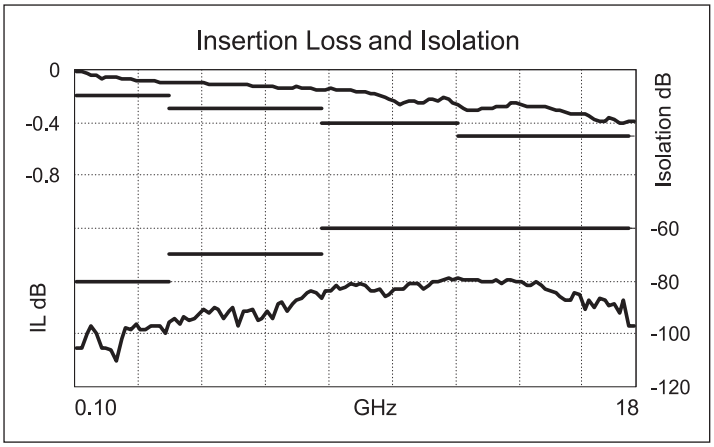

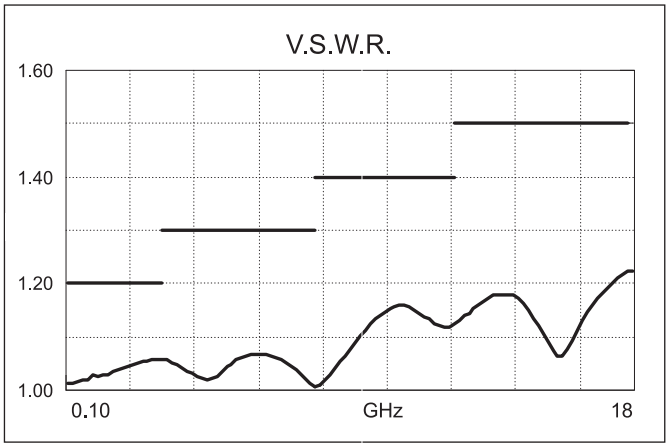

Example : Terminated SP6T SMA up to 26.5 GHz

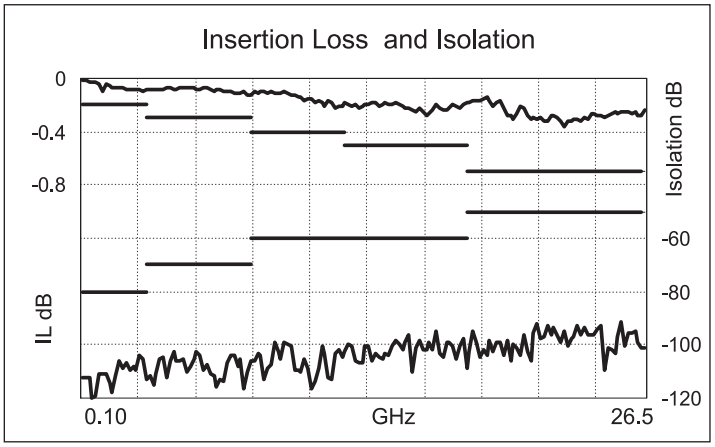

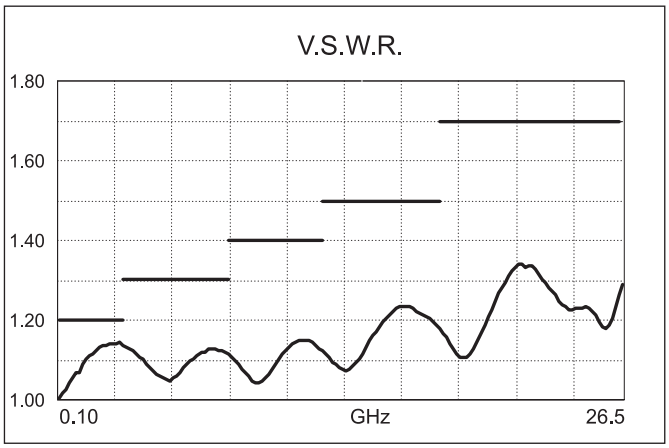

Example : Terminated SP6T SMA 2.9 up to 40 GHz

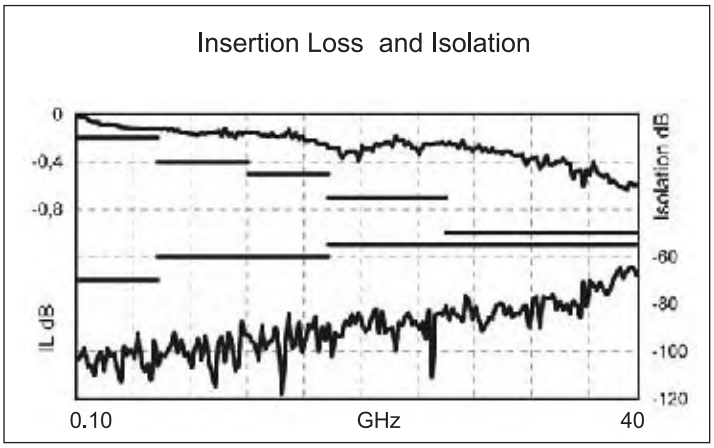

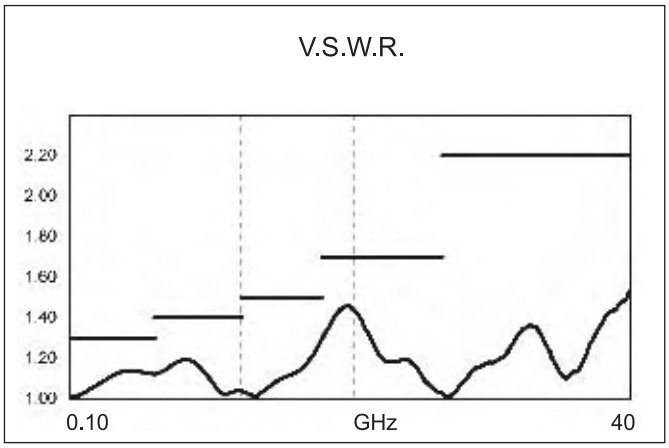

Technical data sheets are available on : ***www.radiall.com***
For more technical information, consult us / E-mail : ***USA : rfswitchusa@radiall.com / Rest of the world : switchingproducts@radiall.com***

SPnT up to 40 GHz - RAMSES Concept

SMA - SMA 2.9 - QMA - DIN 1.6/5.6

Example : Non terminated SP6T 1.6/5.6 up to 2.5 GHz

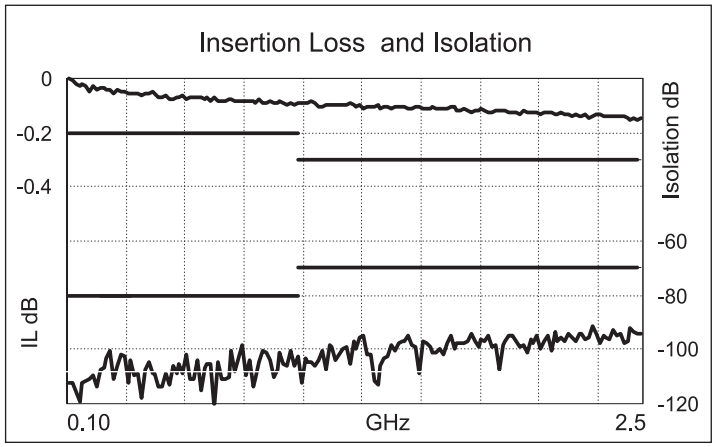

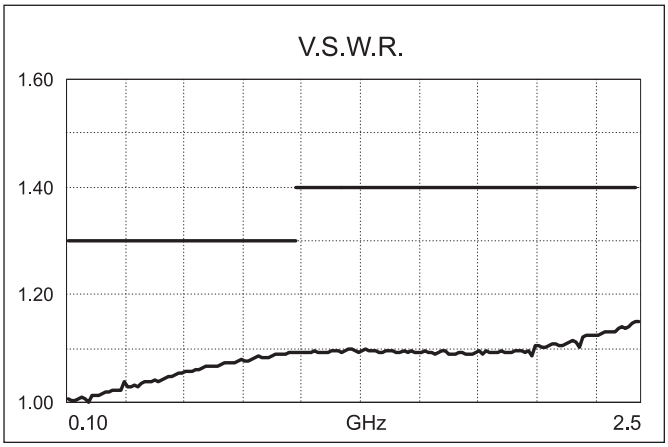

Example : SP8T SMA up to 18 GHz

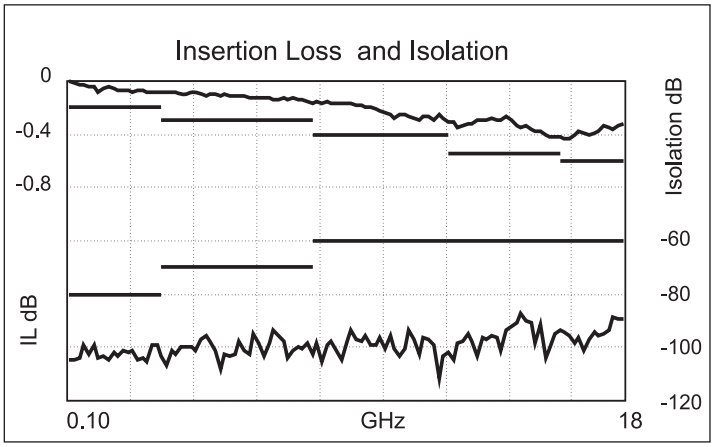

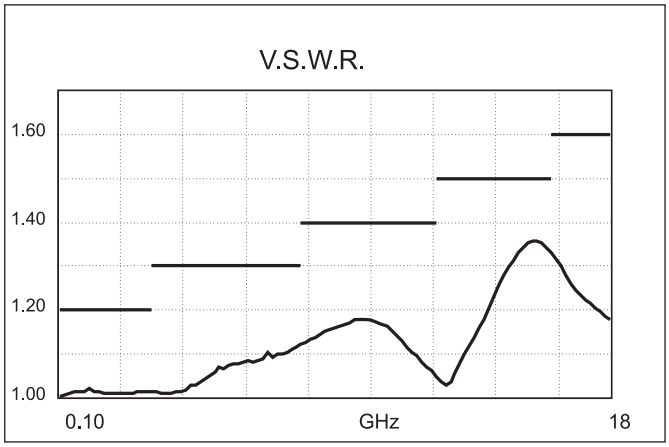

Example : SP10T SMA up to 18 GHz

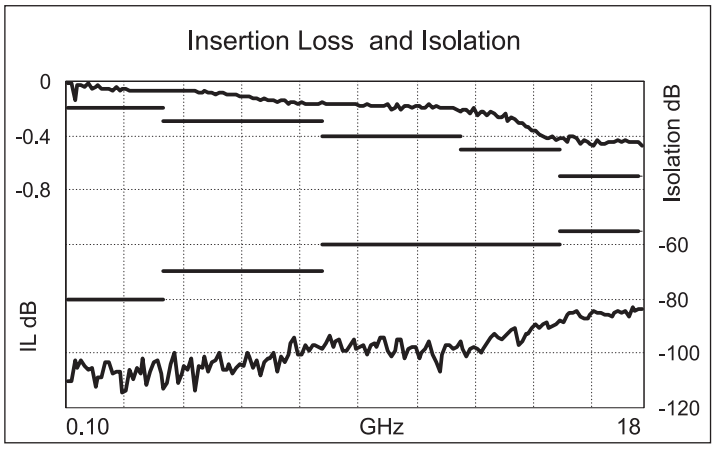

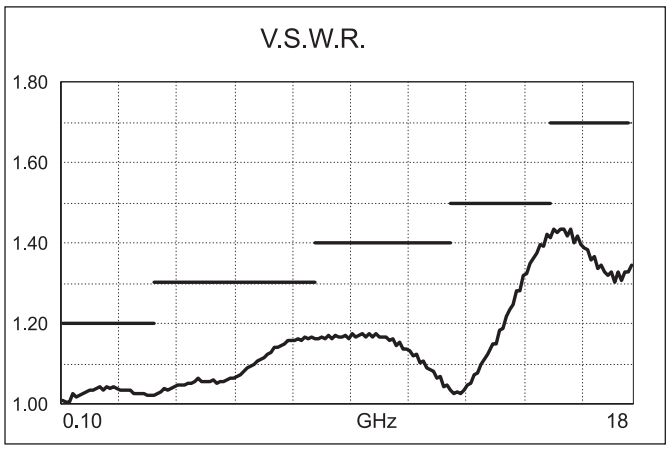

Technical data sheets are available on : ***www.radiall.com***
For more technical information, consult us / E-mail : ***USA : rfswitchusa@radiall.com / Rest of the world : switchingproducts@radiall.com***

Example : SP12T SMA up to 12.4 GHz

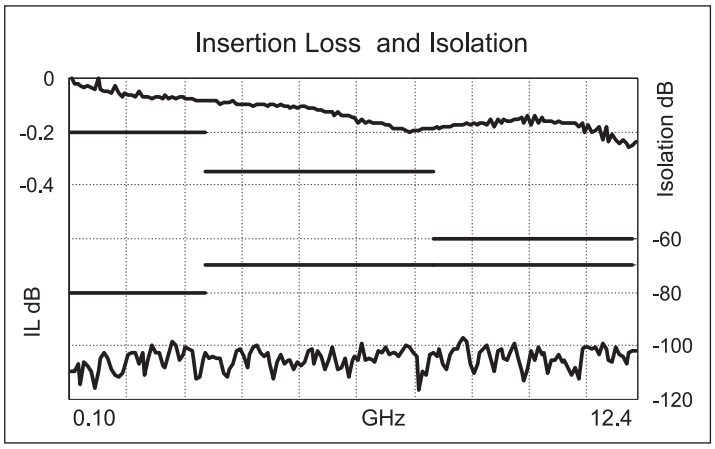

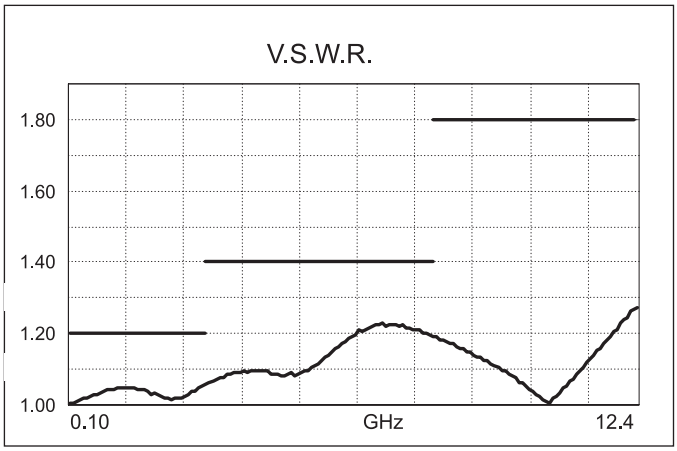

TYPICAL OUTLINE DRAWINGS

NON TERMINATED 3 to 6 positions

Connectors	*A max (mm)*
SMA up to 26.5 GHz	**7.4**
SMA 2.9 up to 40 GHz	**6.3**
QMA up to 6 GHz	**10.8**
DIN 1.6/5.6 up to 2.5 GHz	**11.5**

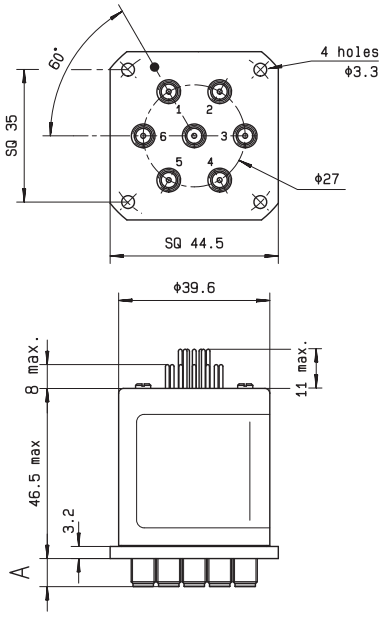

Solder	Type 0 or 1 with option 0 - 1- 3 or 4
Pins	Type 2 or 3 with option 0 or 1

SPnT

*Technical data sheets are available on : **www.radiall.com***
*For more technical information, consult us / E-mail : **USA : rfswitchusa@radiall.com / Rest of the world : switchingproducts@radiall.com***

TYPICAL OUTLINE DRAWINGS

NON TERMINATED 3 to 6 positions (Cont)

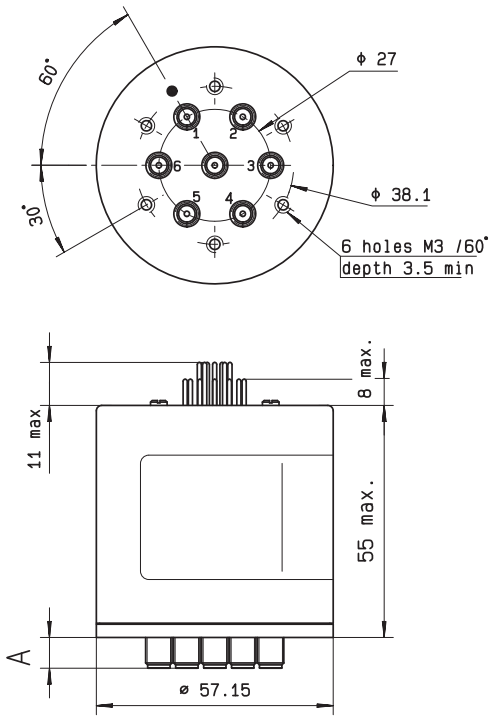

Solder Pins	**Type 0 or 1 with option 2 or 8**
	Type 2 or 3 with option 2 - 3 - 4 or 8
	Type 4 - 5 - 8 or 9 with option 0 - 2 or 8

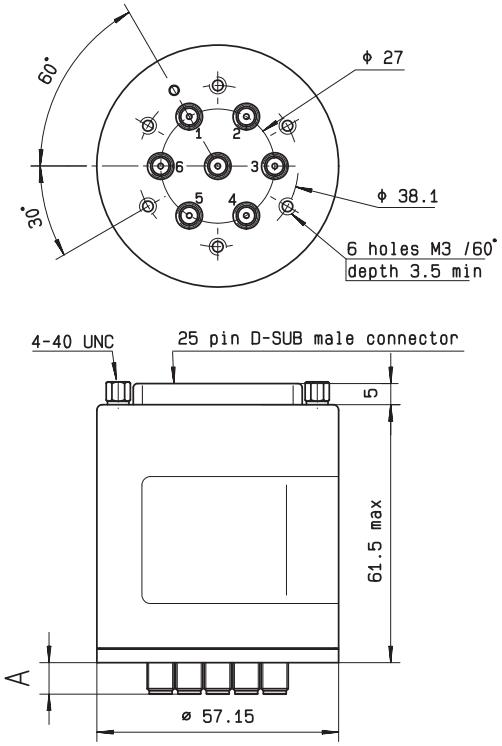

D-Sub connector	**All models**

Connectors	*A max (mm)*
SMA up to 26.5 GHz	**7.4**
SMA 2.9 up to 40 GHz	**6.3**
QMA up to 6 GHz	**10.8**
DIN 1.6/5.6 up to 2.5 GHz	**11.5**

SPnT

Technical data sheets are available on : ***www.radiall.com***
For more technical information, consult us / E-mail : ***USA : rfswitchusa@radiall.com / Rest of the world : switchingproducts@radiall.com***

TYPICAL OUTLINE DRAWINGS

TERMINATED 3 to 6 positions

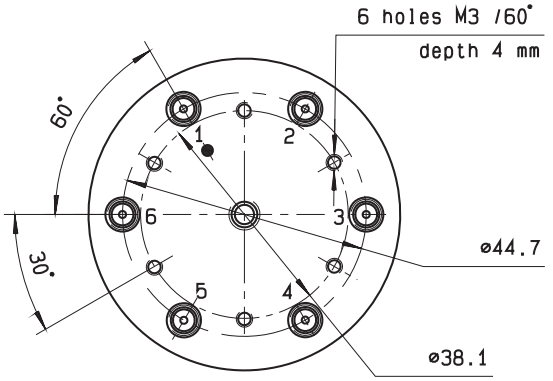

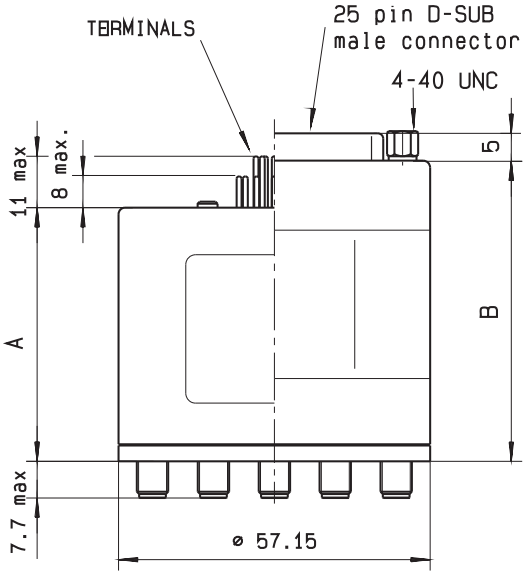

	A	B
	Solder Pins	D-Sub connector
Type 0 - 1 - 2 or 3 with option 0 - 1 - 3 or 4	**46.5**	**61.5**
Type 0 - 1 - 2 or 3 with option 2 or 8	**55.5**	**61.5**
Type 4 - 5 - 8 or 9 with option 0 - 1 - 2 or 8	**55.5**	**61.5**

Technical data sheets are available on : ***www.radiall.com***
For more technical information, consult us / E-mail : ***USA : rfswitchusa@radiall.com / Rest of the world : switchingproducts@radiall.com***

TYPICAL OUTLINE DRAWINGS

TERMINATED 3 to 6 positions

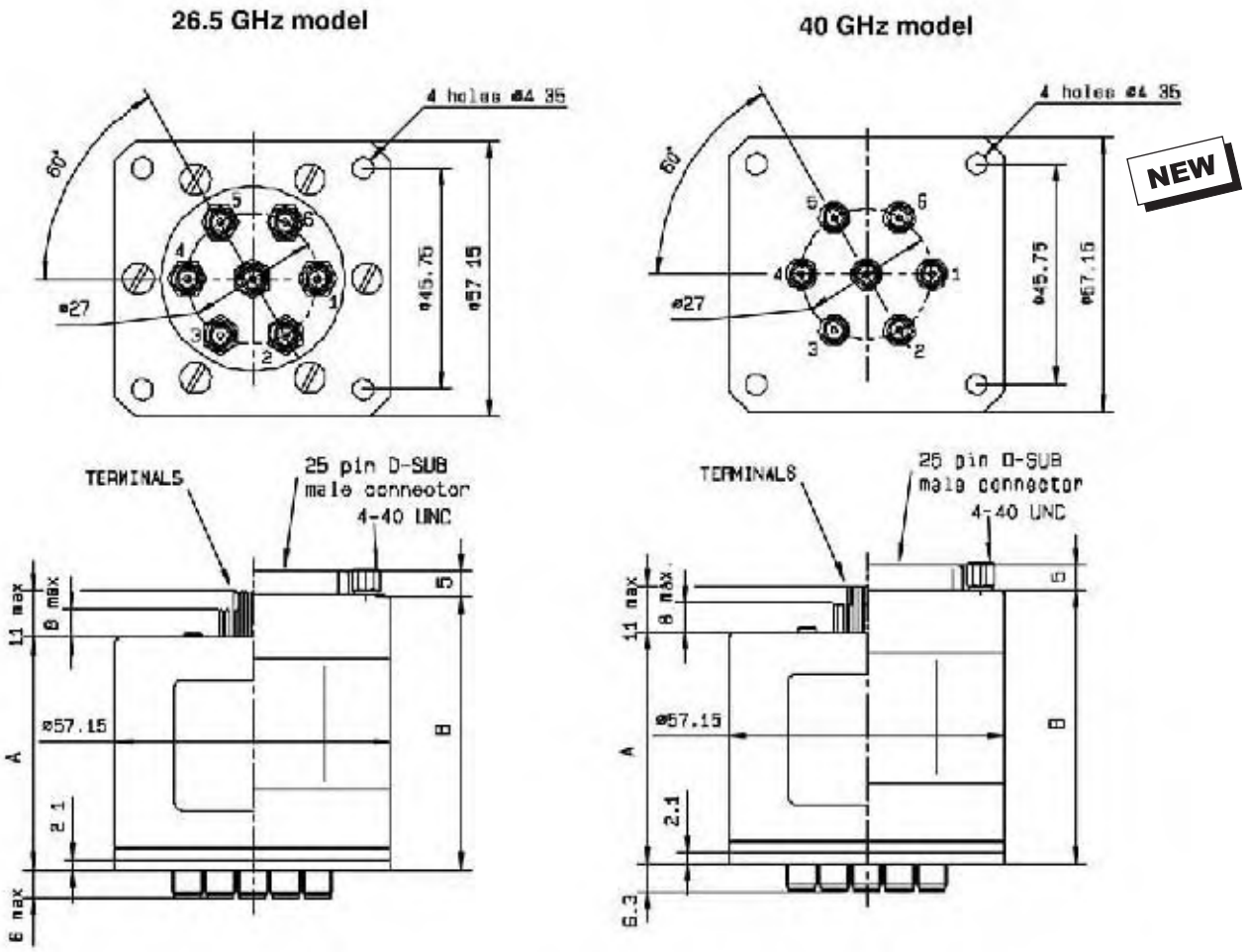

	A Solder Pins	B D-Sub connector
Type 0 - 1 - 2 or 3 with option 0 - 1 - 3 or 4	48.5	63.5
Type 0 - 1 - 2 or 3 with option 2 or 8	57.5	63.5
Type 4 - 5 - 8 or 9 with option 0 - 1 - 2 or 8	57.5	63.5

Technical data sheets are available on : ***www.radiall.com***
For more technical information, consult us / E-mail : ***USA : rfswitchusa@radiall.com / Rest of the world : switchingproducts@radiall.com***

TYPICAL OUTLINE DRAWINGS

TERMINATED or NOT, 7 to 12 positions

	A maxi (mm)	
Type	Solder Pins	D-Sub connector
Type 0 - 1 - 2 or 3 with option 0 - 1 - 3 or 4	**50**	**66**
Type 0 - 1 - 2 or 3 with option 2 or 8 and Type 4 - 5 - 8 or 9 with option 0 - 1 - 2 or 8	**61**	**66**

Number of positions	**B** diameter	**C** diameter	**D** diameter	**E**
7 - 8	**49.8**	**44.7**	**57.15**	**4 holes M3**
9 - 10	**30.5**	**44.7**	**63.5**	
11 - 12	**40.6**	**55.9**	**68.3**	**depth 4mm**

10 position model
Terminated, up to 18 GHz with solder pins

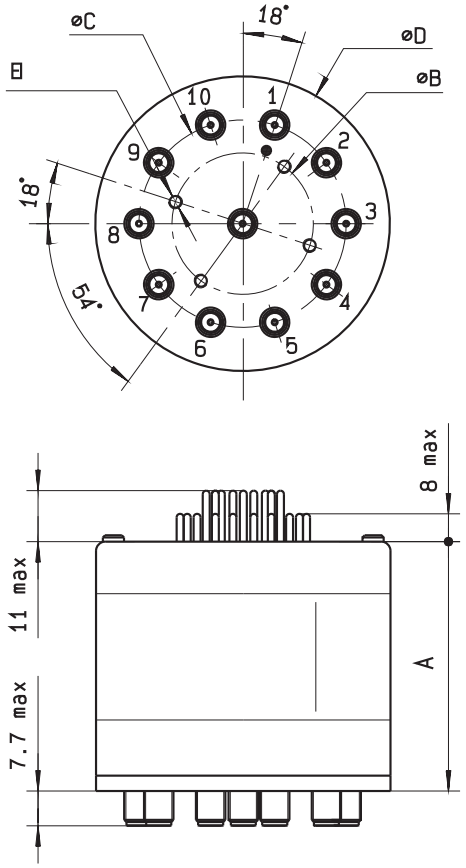

12 position model
Terminated, up to 12.4 GHz with D-Sub

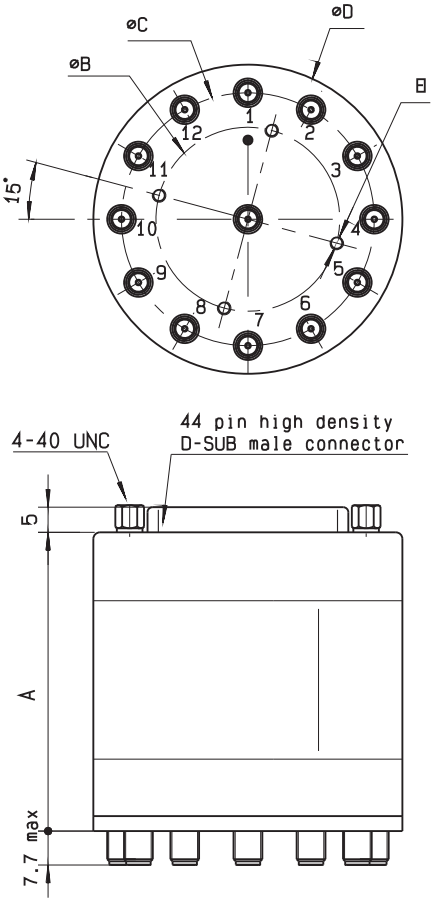

Technical data sheets are available on : ***www.radiall.com***
For more technical information, consult us / E-mail : ***USA : rfswitchusa@radiall.com / Rest of the world : switchingproducts@radiall.com***

RF Connectors allocation for SPnT serie :

Connectors "A" : 1.6/5.6, QMA, SMA, SMA2.9
Other Connectors : N, BNC, TNC

SPnT 3 ways

NON TERMINATED Version		TERMINATED Version	
Up to 18 GHz models Up to 40 GHz models Connectors "A"	Up to 18 GHz models All Connectors	Up to 18 GHz models All Connectors	26.5 GHz and 40 GHz models with SMA - SMA 2.9
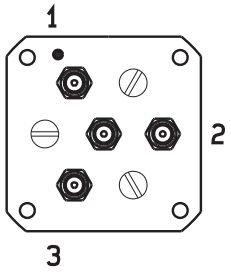	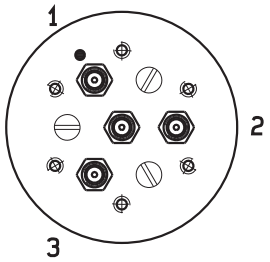	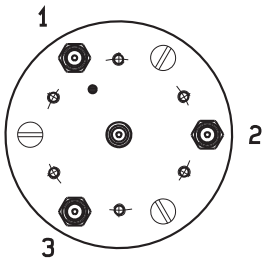	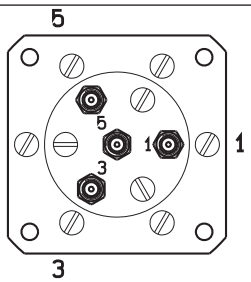

SPnT 4 ways

NON TERMINATED Version		TERMINATED Version	
Up to 18 GHz models Up to 40 GHz models Connectors "A"	Up to 18 GHz models All Connectors	Up to 18 GHz models All Connectors	26.5 GHz and 40 GHz models with SMA - SMA 2.9
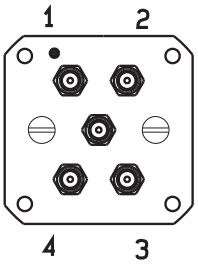	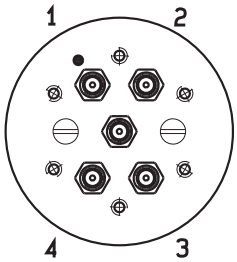	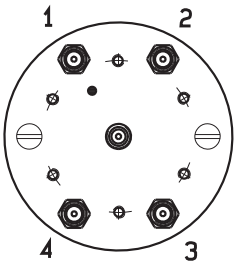	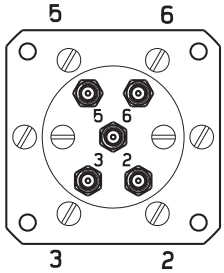

SPnT 5 ways

NON TERMINATED Version		TERMINATED Version	
Up to 18 GHz models Up to 40 GHz models Connectors "A"	Up to 18 GHz models All Connectors	Up to 18 GHz models All Connectors	26.5 GHz and 40 GHz models with SMA - SMA 2.9
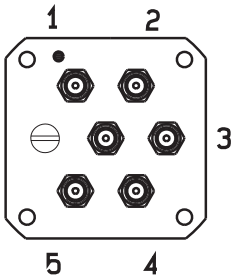	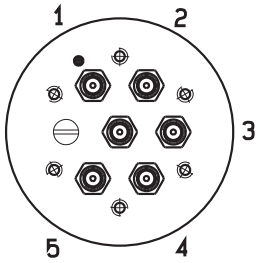	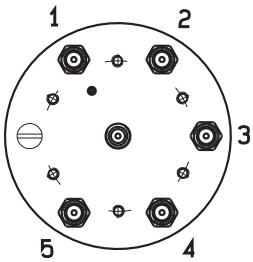	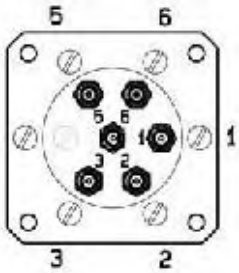

Technical data sheets are available on : ***www.radiall.com***
For more technical information, consult us / E-mail : ***USA : rfswitchusa@radiall.com / Rest of the world : switchingproducts@radiall.com***

RF Connectors allocation (continued) :

SPnT 6 ways			
NON TERMINATED Version		TERMINATED Version	
Up to 18 GHz models Up to 40 GHz models Connectors “A”	Up to 18 GHz models All Connectors	Up to 18 GHz models All Connectors	26.5 GHz and 40 GHz models with SMA - SMA 2.9
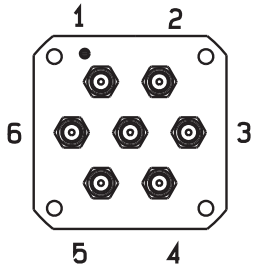	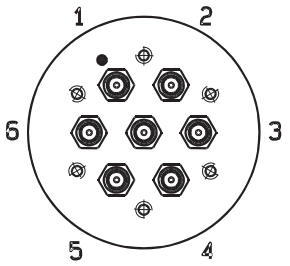	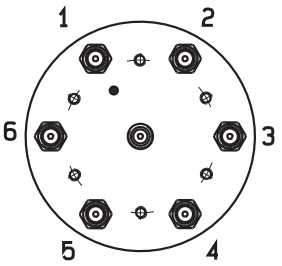	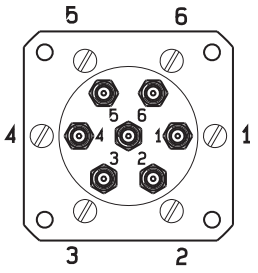

SPnT 7 and 8 ways	SPnT 9 and 10 ways	SPnT 11 and 12 ways
All connectors	All connectors	All connectors
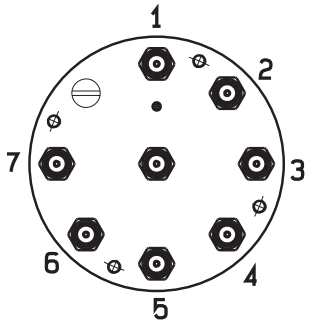	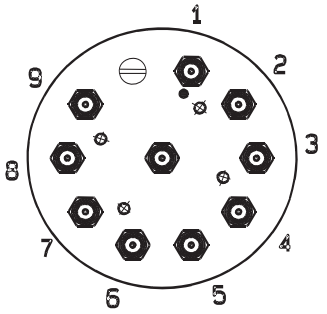	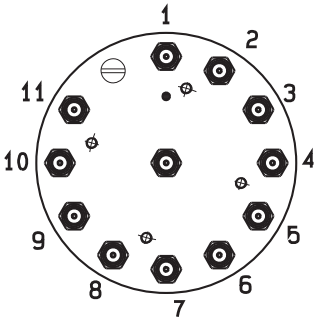
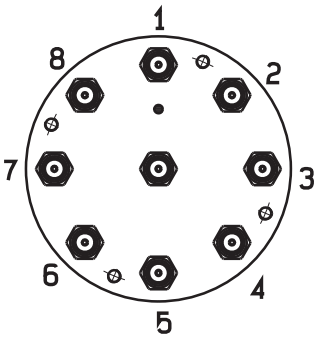	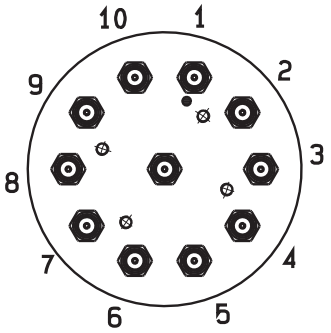	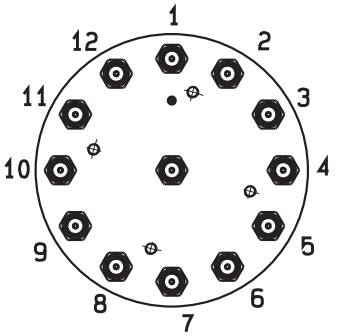

ACCESSORIES

A printed circuit board interface connector has been designed for easy mounting on terminals :
It must be ordered separately. See on page **SPnT-35**.

*Technical data sheets are available on : **www.radiall.com***
*For more technical information, consult us / E-mail : **USA : rfswitchusa@radiall.com / Rest of the world : switchingproducts@radiall.com***

PART NUMBER SELECTION

R 5 7 . . . . . .

Model :
- **3** : Without 50 Ω termination
- **4** : With 50 Ω termination

RF Connectors :
- **0** : N up to 3 GHz
- **1** : N up to 12.4 GHz
- **2** : BNC up to 3 GHz (4)(5)
- **5** : TNC up to 3 GHz (4)(5)
- **6** : TNC up to 12.4 GHz (4)(5)

Type :
- **0** : Normally open
- **1** : Normally open + I.C.
- **2** : Latching
- **3** : Latching + I.C.
- **4** : Latching + S.C.O. (1)(4)
- **5** : Latching + S.C.O.+ I.C. (1)(4)
- **8** : Latching + S.C.O.+ A.R. (1)
- **9** : Latching + S.C.O.+ I.C. + A.R. (1)

Actuator Voltage :
- **2** : 12 Vdc
- **3** : 28 Vdc

Actuator Terminals :
- **0** : Solder pins
- **5** : D-Sub connector

Options :
- **0** : Without option
- **1** : Positive common (2)(6)
- **2** : Compatible TTL driver (high level)(1)(8)
- **3** : With suppression diodes
- **4** : With suppression diodes and positive common (2)(6)
- **8** : BCD driver TTL compatible (high level)(1)(3)(7)(8)

Number of Positions :
- **3** : 3 Positions
- **4** : 4 Positions
- **5** : 5 Positions
- **6** : 6 Positions
- **7** : 7 Positions
- **8** : 8 Positions
- **9** : 9 Positions
- **0** : 10 Positions
- **1** : 11 Positions
- **2** : 12 Positions

I.C. : Indicator contact / S.C.O. : Self Cut-Off / A.R. : Auto Reset.
(1) : These models are already equiped with suppression diodes.
(2) : Standard products are equiped with negative common.
(3) : Latching BCD driver enables also a global reset through driver code 0000 (see BCD logic coding page Intr-11).
(4) : Available only up to 6 positions.
(5) : Model "3" only.
(6) : Option not available for type 4,5,8 & 9.
(7) : Option available only with type 0,1,8 & 9.
(8) : Polarity is not relevant to application for switches with TTL driver.

ADDITIONAL INFORMATION

Type 2, 3, 4 & 5 :
- Latching models have a RESET pin which commands the reset of all positions. This command should be used before switching from one position to another. If not, two positions will be set at the same time.
Note : During the RESET operation the current is : Nominal operating current x number of positions.

Type 8, 9 :
- Latching models with AUTOMATIC RESET are available; these products have an internal SET/RESET circuit which automatically resets all the non-selected positions and sets the desired position. This option simplifies the use of latching switches by suppressing the RESET command in switching sequence.
An electronic circuit supplies successively groups of 2 or 3 actuators, in order to limit the maximum current.
The current with this option is the total current of 2 or 3 reset coils at the same time (see table and switching sequence on following page).
Example : During the AUTOMATIC RESET operation, at 28V, 4 position switch has temporarily a consumption of only 250 mA, during 40 ms maximum.

Technical data sheets are available on : ***www.radiall.com***
For more technical information, consult us / E-mail : ***USA : rfswitchusa@radiall.com / Rest of the world : switchingproducts@radiall.com***

SWITCHING SEQUENCE

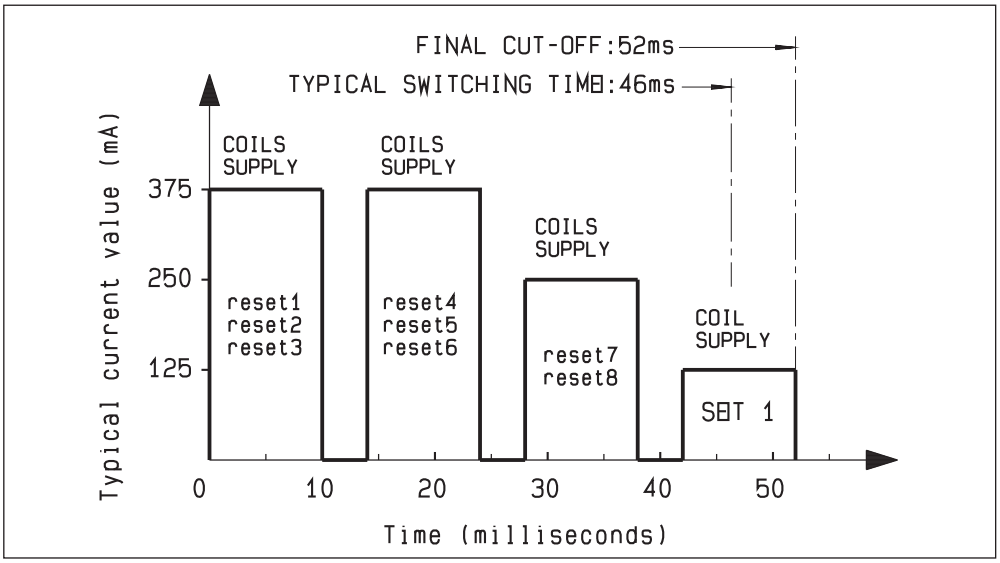

Operating total current at 23 °C (mA) SPnT LATCHING				
Number of positions	12 Volts		28 Volts	
	Manual Reset	Automatic Reset	Manual Reset	Automatic Reset
3 to 4	**320 x n**	640	**125 x n**	250
5 to 8	**320 x n**	960	**125 x n**	375
9 to 12	**320 x n**	1280	**125 x n**	500

n = number of positions

AVAILABILITY OF OPTIONS ACCORDING TO BOTH TYPE AND NUMBER OF POSITIONS

Type	Number of positions	Available Options
0 or 1	**3 to 12**	0 - 1 - 2 - 3 - 4 - 8
2 or 3	**3 to 6**	0 - 1 - 2 - 3 - 4
	7 to 12	0 - 1 - 3 - 4
4 or 5	**3 to 6**	0 - 2
	7 to 12	Not available
8 or 9	**3 to 12**	0 - 2 - 8

Technical data sheets are available on : ***www.radiall.com***
For more technical information, consult us / E-mail : ***USA : rfswitchusa@radiall.com / Rest of the world : switchingproducts@radiall.com***

SPnT up to 12.4 GHz - RAMSES Concept
N - BNC - TNC

RF PERFORMANCES

N - BNC - TNC - Connector						
Number of positions	**Frequency Range GHz**		**V.S.W.R.** (max)	**Insertion Loss** (max) dB	**Isolation** (min) dB	**Impedance** Ohms
	DC - 3 DC - 12.4	DC - 3	1.20	0.20	80	50
3 to 6		3 - 8	1.35	0.35	70	
		8 - 12.4	1.50	0.50	60	
7 to 10	DC - 3 DC - 8	DC - 3	1.30	0.30	80	50
		3 - 8	1.50	0.50	70	
11 to 12	DC - 3 DC - 8	DC - 3	1.35	0.30	70	50
		3 - 8	1.70	0.50	60	

See page SPnT - 33 for typical RF performances

ADDITIONAL SPECIFICATIONS

Operating mode		**Normally open**		**Latching**	
Nominal operating voltage (across operating temperature)	Vdc	**12** (10.2 / 13)	**28** (24 / 30)	**12** (10.2 / 13)	**28** (24 / 30)
Coil resistance (+/-10%)	Ω	47.5	275	See page **SPnT-31**	
Nominal operating current at 23°C	mA	250	102		
Average power		See Power Rating Chart page **Intro-14**			
TTL input	High Level	2.2 to 5.5 V (TTL Option) / 3.5 to 5.5 V (BCD Option)			
	Low Level	0 to 0.8 V (TTL Option) / 0 to 1.5 V (BCD Option)			
Indicator rating		1 Watt / 30 Volts / 100 mA			
Switching time (max)	ms	15 ms For automatic reset models : SP3T to SP6T => 40 ms SP7T to SP12T => 50 ms			
Life (min)	Not terminated SP3 to 6T (R573 serie)	2 million cycles			
	terminated SP3 to 6T (R574 serie)				
	SP7 to 12T (all models)				
Connectors		N - TNC - BNC			
Actuator terminals		Solder pins or male 25 pin D-Sub connector			
Operating temperature range		-40°C to +85°C			
Storage temperature range		-55°C to +85°C			
Vibration (MIL STD 202 , method 204D , cond.C)		10-2000 Hz , 10g operating			
Shock (MIL STD 202 , method 213B , cond.C)		50g / 1 ms , ½ sine operating			

SPnT

*Technical data sheets are available on : **www.radiall.com***
*For more technical information, consult us / E-mail : **USA : rfswitchusa@radiall.com / Rest of the world : switchingproducts@radiall.com***

R573 AND R574 TYPICAL RF PERFORMANCES

Example : SP6T N up to 12.4 GHz

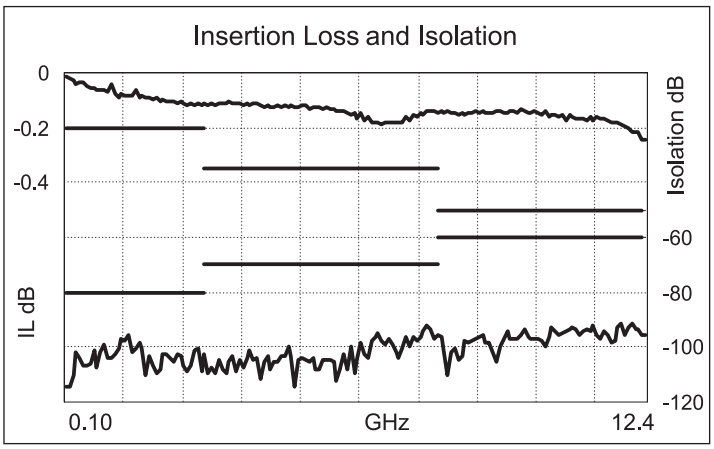

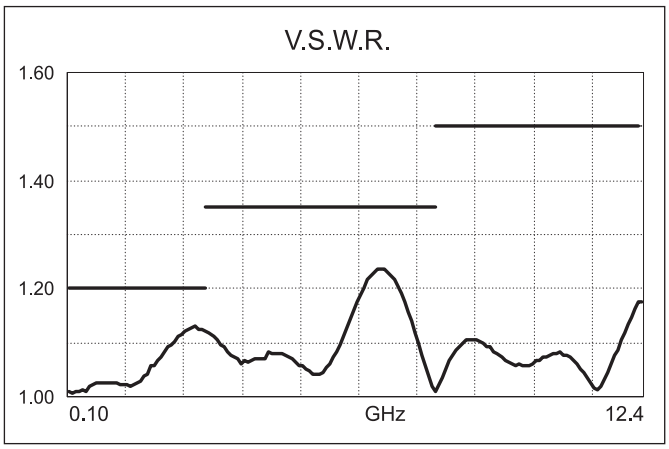

Example : SP6T TNC to 12.4 GHz

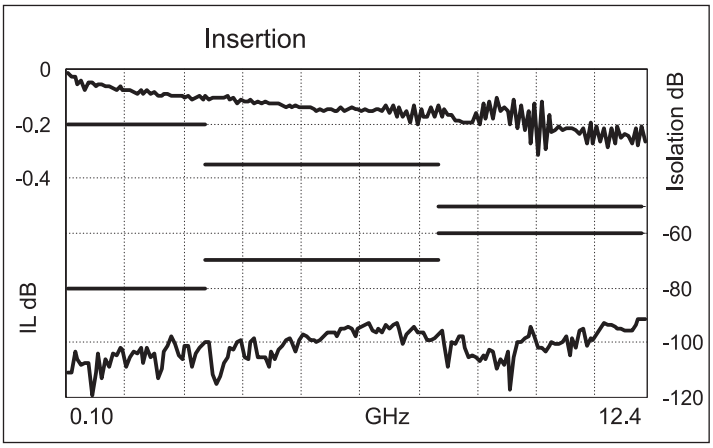

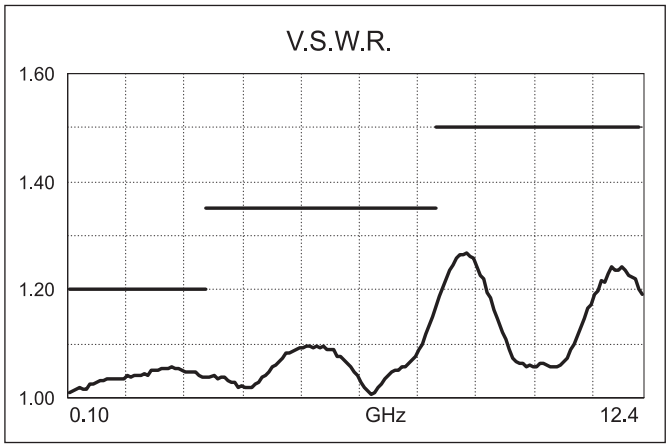

Example : SP8T N up to 8 GHz

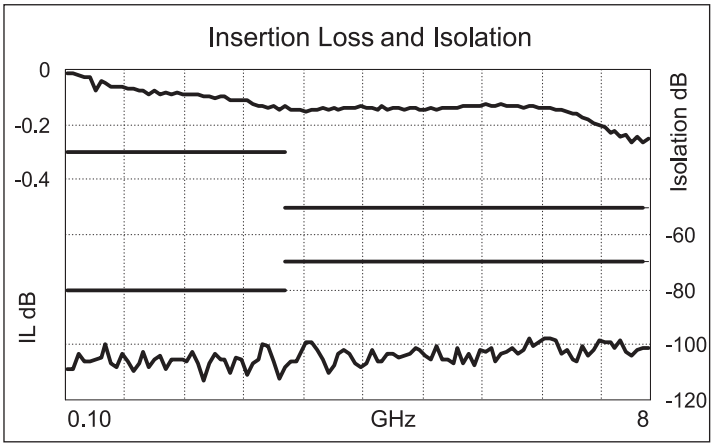

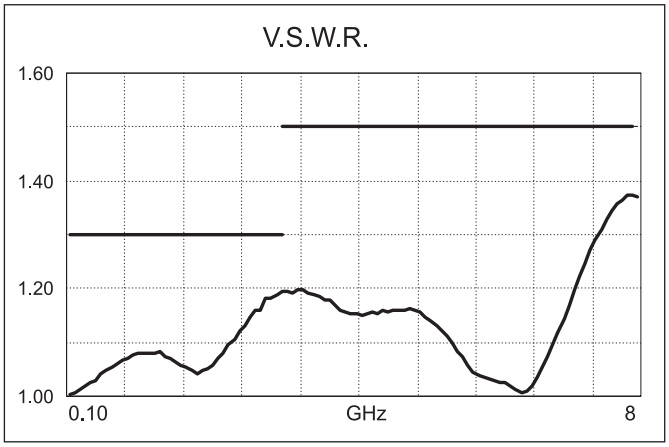

*Technical data sheets are available on : **www.radiall.com***
*For more technical information, consult us / E-mail : **USA : rfswitchusa@radiall.com / Rest of the world : switchingproducts@radiall.com***

TYPICAL OUTLINE DRAWINGS

TERMINATED or NOT, 3 to 12 positions

Connectors	*F max*
N	**17.7**
BNC	**11.3**
TNC	**11.3**

	A maxi	
Type	Solder Pins	D-Sub connector
Type 0 - 1 - 2 or 3 with option 0 - 1 - 3 or 4	**56**	**66**
Type 0 - 1 - 2 or 3 with option 2 or 8 and Type 4 - 5 - 8 or 9 with option 0 - 1 - 2 or 8	**71**	**71**

Nbre de positions	**B** diameter	**C** diameter	**D** diameter	**E**
3 - 6	**54**	**44.7**	**63.5**	**6 holes M4/60°**
7 - 8	**67.7**	**58.9**	**76.2**	**4 holes M4/90°**
9 - 10	**88.9**	**76.2**	**101.6**	**5 holes M4/72°**
11 - 12	**67.7**	**101.6**	**127**	**6 holes M4/60°**

Model 8 positions up to 12.4 GHz
With solder pins

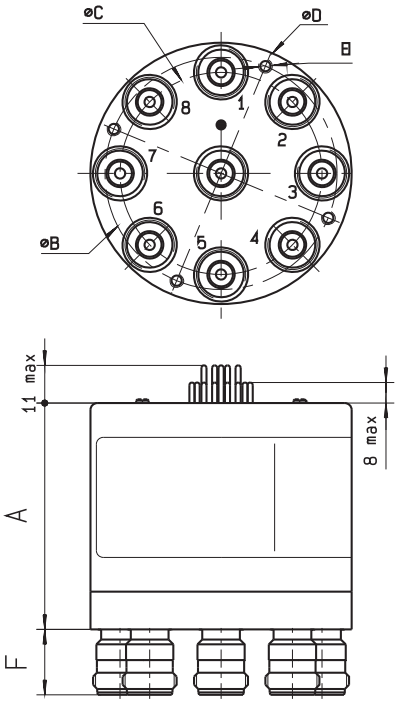

Model 10 positions up to 8 GHz
D-Sub male connector

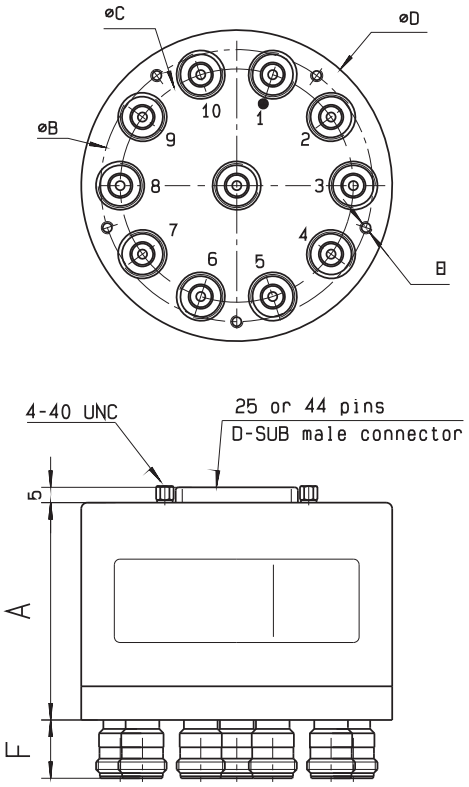

RF CONNECTORS ALLOCATION

See on page **SPnT-28** and **SPnT-29**

*Technical data sheets are available on : **www.radiall.com***
*For more technical information, consult us / E-mail : **USA : rfswitchusa@radiall.com / Rest of the world : switchingproducts@radiall.com***

PRINTED CIRCUIT BOARD INTERFACE CONNECTOR

A printed circuit board interface connector has been designed for easy mounting on terminals :
It must be ordered separately.

For SPnT model R573 and R574 series : Radiall part number : **R599 906 000 for 3 to 6 positions**
R599 908 000 for 7 to 8 positions
R599 900 000 for 9 to 10 positions
R599 902 000 for 11 to 12 positions

R599 906 000

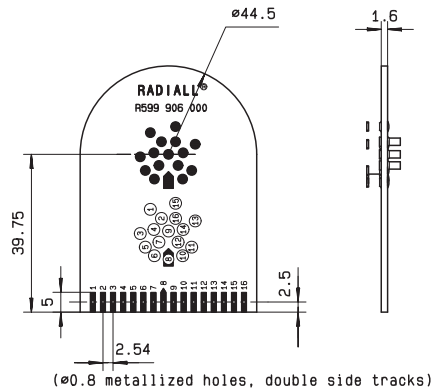

(ø0.8 metallized holes, double side tracks)

R599 908 000

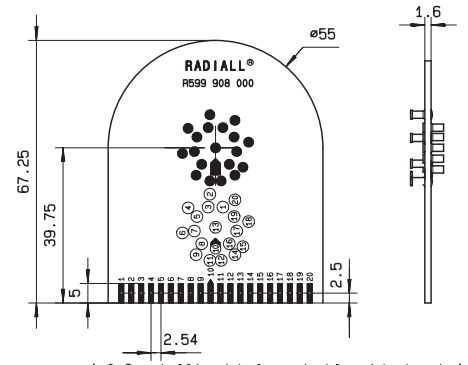

(ø0.8 metallized holes, double side tracks)

R599 900 000

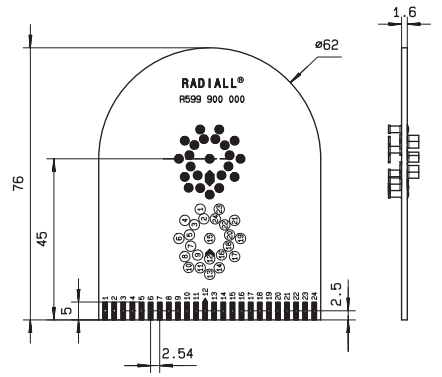

(ø0.8 metallized holes, double side tracks)

R599 902 000

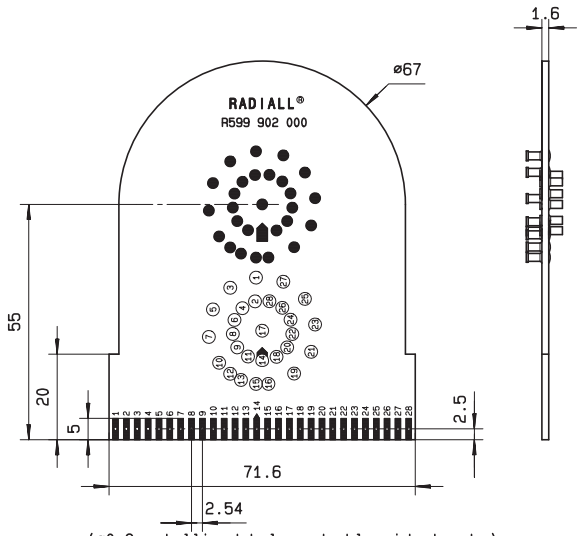

(ø0.8 metallized holes, double side tracks)

Technical data sheets are available on : ***www.radiall.com***
For more technical information, consult us / E-mail : ***USA : rfswitchusa@radiall.com / Rest of the world : switchingproducts@radiall.com***

MOUNTING BRACKET

A range a bracket has been designed for easy machanical mounting of our multithrows switches in your equipment. These brackets must be ordered separately and assembled by yourself according to our recommended process on the next following page.

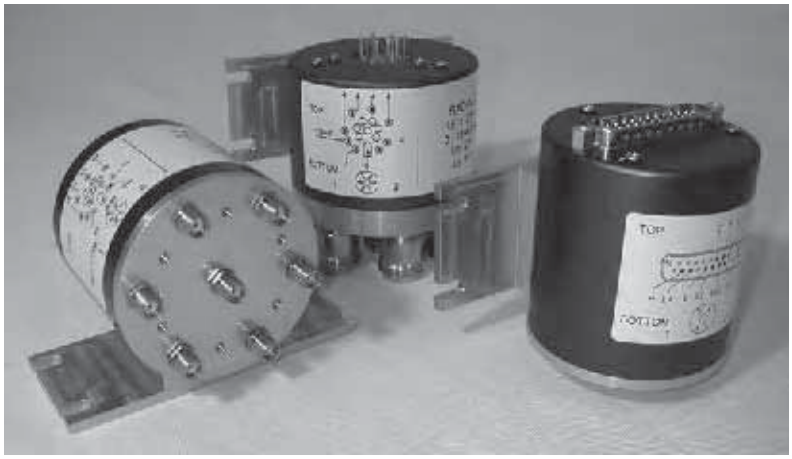

NEW

TYPICAL OUTLINE DRAWINGS

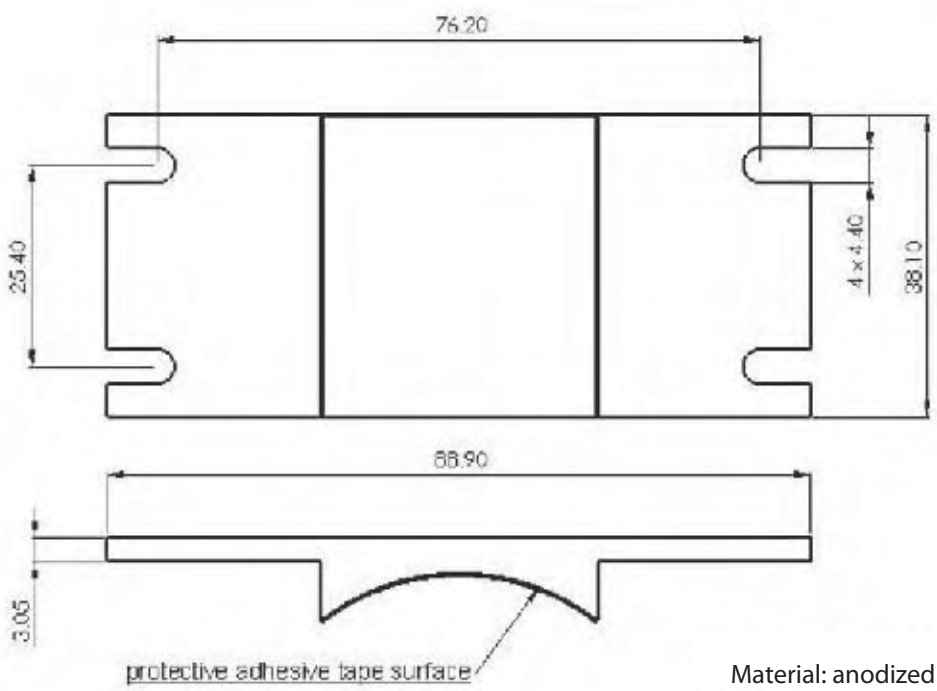

Material: anodized aluminium

ACCESSORIES SPnT - RAMSES Concept
All series

For models with connectors SMA, QMA, SMA 2.9

Number of positions	Type	Options	Model	Part Number
3 to 6 positions	All	2 & 8	R573 series	**R599 920 000**
	4,5,8 & 9	All		
	All	All	R574 series	
7 & 8 positions	All		R573 series	**R599 920 000**
			R574 series	
9 & 10 positions	All	All	R573 series	**R599 921 000**
			R574 series	
11 & 12 positions	All	All	R573 series	**R599 922 000**
			R574 series	

For models with connectors N, TNC, BNC

Number of positions	Type	Options	Model	Part Number
3 to 6 positions	All	All	R573 series	**R599 921 000**
			R574 series	
7 to 12 positions	All	All	R573 series	Not Available
			R574 series	

ADHESIVE BONDING PROCESS

1) Clean the can with alcohol (Isopropanol or Ethanol)
2) Remove the protective adhesive tape surface
3) Glue the mounting bracket only on the blue can and not on the RF body. Do not glue mounting bracket on the marking (see drawing)
4) Firmly press the mounting bracket against the can, and maintain pressure for several second (10 seconds min), then, unit is now properly bonded (see note 1 & 2)
5) Product can be assembled in your equipment with four screws (non included)

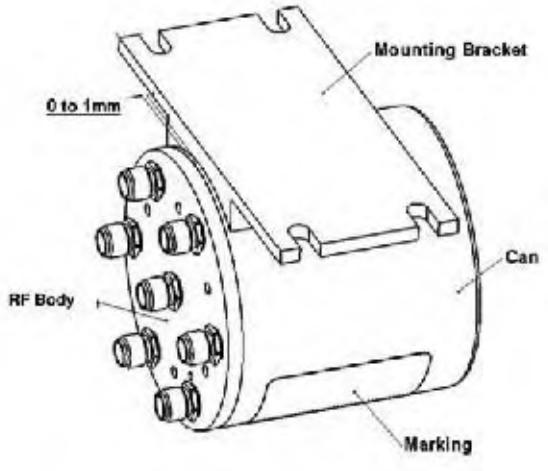

MOUNTING SQUARE FLANGES

A range a square flange has been designed for easy machanical mounting of our multithrows switches in your equipment, especially on front panel. These supports must be ordered separately (like mounting brackets) and assembled by yourself according to our recommended process on the next following page.

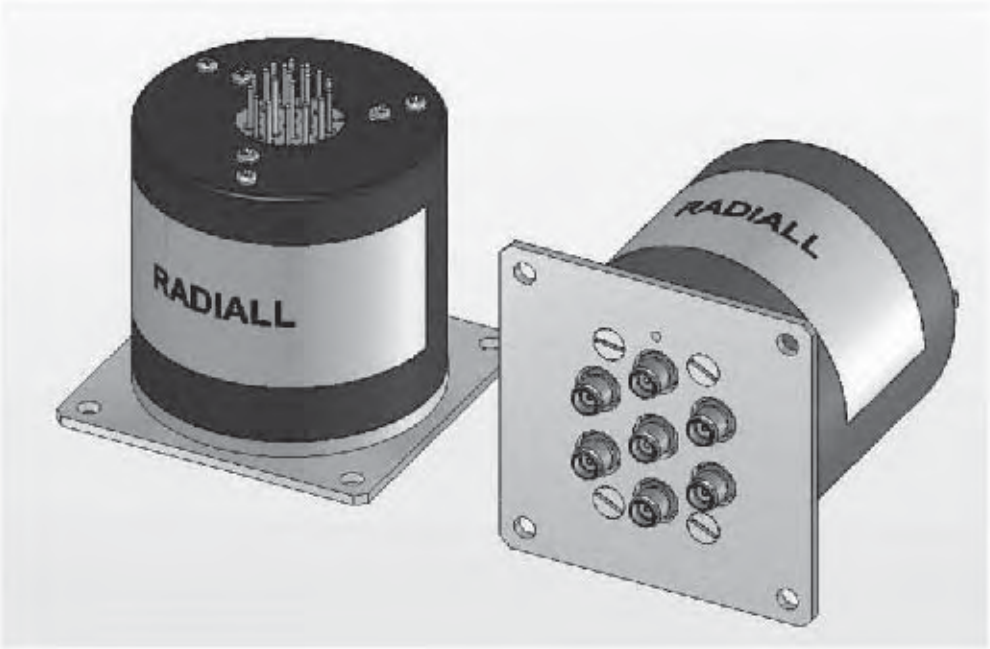

NEW

TYPICAL OUTLINE DRAWINGS

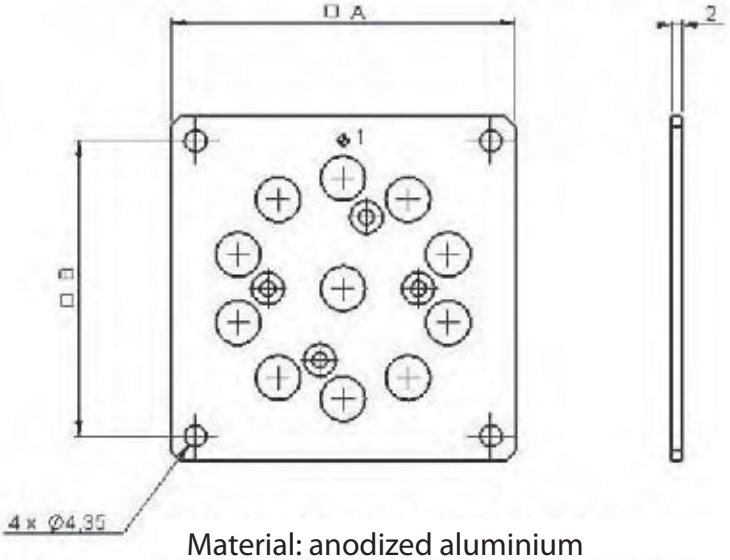

RADIALL Part Number	A (mm)	B (mm)
R599 310 000	63.45	53.45
R599 311 000	63.45	53.45
R599 312 000	63.45	53.45
R599 313 000	69.8	59.8
R599 314 000	74.6	64.6

Material: anodized aluminium

Technical data sheets are available on : ***www.radiall.com***
For more technical information, consult us / E-mail : ***USA : rfswitchusa@radiall.com / Rest of the world : switchingproducts@radiall.com***

For models with connectors SMA, QMA, SMA 2.9

Number of positions	Type	Options	Model	Part Number
3 to 6 positions	All	All	R573 series	**R599310000**
			R574 series	**R599311000**
7 & 8 positions	All	All	R573 series R574 series	**R599312000**
9 & 10 positions	All	All	R573 series R574 series	**R599313000**
11 & 12 positions	All	All	R573 series R574 series	**R599314000**

For models with connectors 1.6/5.6, N, TNC, BNC : available upon request

MOUNTING PROCESS

1) Assemble the square flange on the RF body of the switch as the following drawing below.
CAUTION : don't forget to positione correctly the reference mark of port 1
2) Screw the four screws (delivered with the square flange)

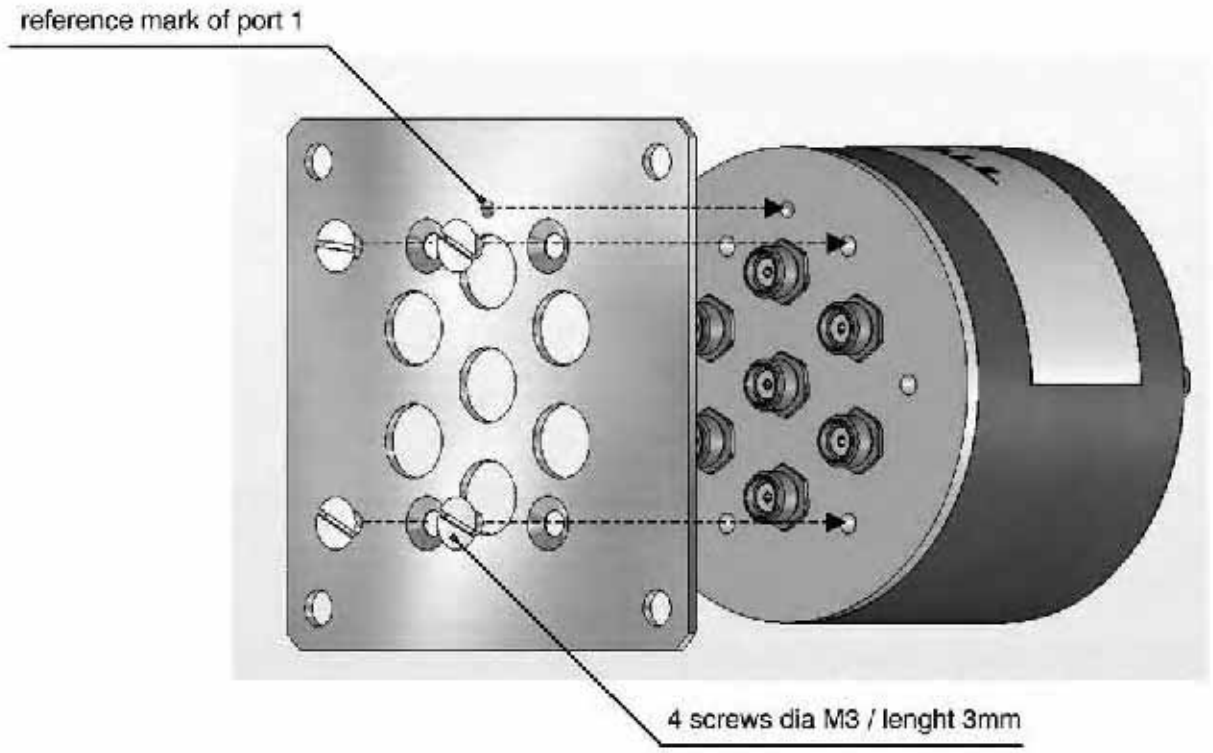

COAXIAL ELECTRICAL SCHEMATICS
R573 & R574 series

NORMALLY OPEN

WITHOUT OPTION
R573 -0- -0- / R574 -0- -0-

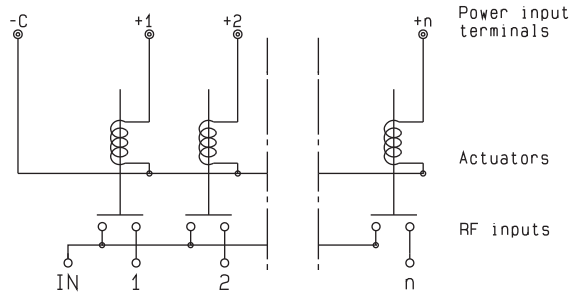

WITH INDICATOR CONTACT
R573 -1- -0-/ R574 -1- -0-

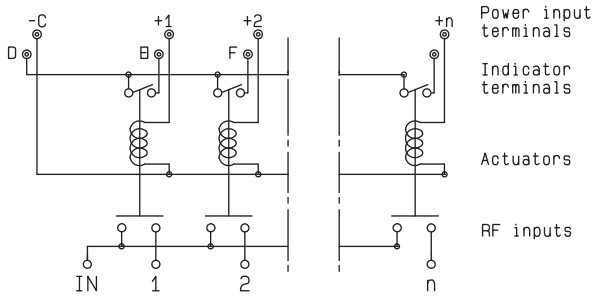

WITH SUPPRESSION DIODES
R573 -0- -3- / R574 -0- -3-

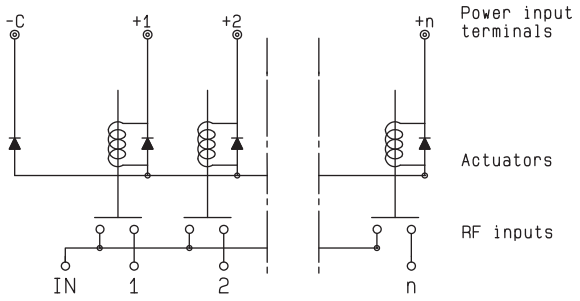

WITH SUPPRESSION DIODES AND INDICATOR CONTACT
R573 -1- -3- / R574 -1- -3-

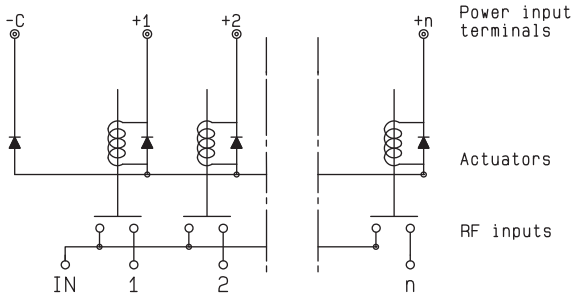

WITH TTL DRIVER
(suppression diodes are included)
R573 -0- -2- / R574 -0- -2-

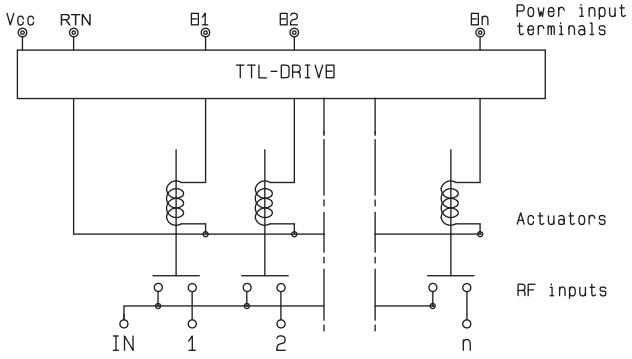

WITH TTL DRIVER AND INDICATOR CONTACT
(suppression diodes are included)
R573 -1- -2- / R574 -1- -2-

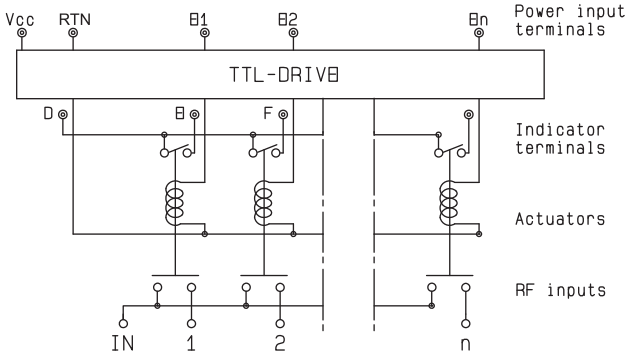

Technical data sheets are available on : ***www.radiall.com***
For more technical information, consult us / E-mail : ***USA : rfswitchusa@radiall.com / Rest of the world : switchingproducts@radiall.com***

COAXIAL ELECTRICAL SCHEMATICS
R573 & R574 series

NORMALLY OPEN

WITH BCD DRIVER, TTL COMPATIBLE
(suppression diodes are included)
573 -0- -8- / R574 -0- -8-

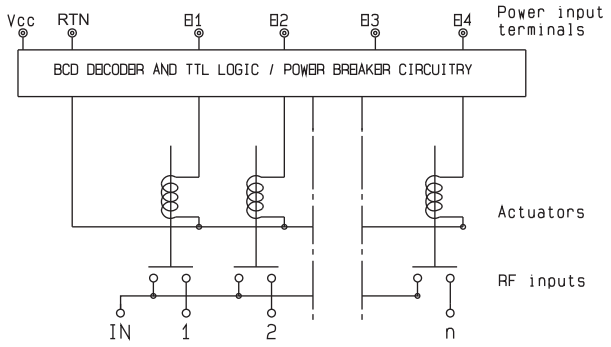

WITH BCD DRIVER, TTL COMPATIBLE AND INDICATOR CONTACT
(suppression diodes are included)
573 -1- -8- / R574 -1- -8-

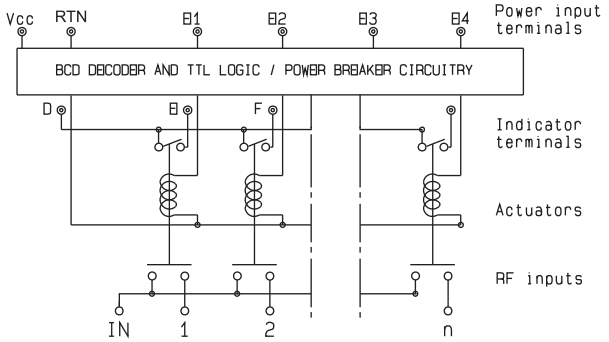

WITH POSITIVE COMMON
R573 -0- -1- / R574 -0- -1-

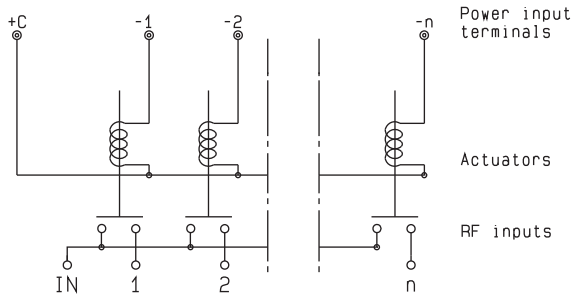

WITH POSITIVE COMMON AND INDICATOR CONTACT
R573 -1- -1- / R574 -1- -1-

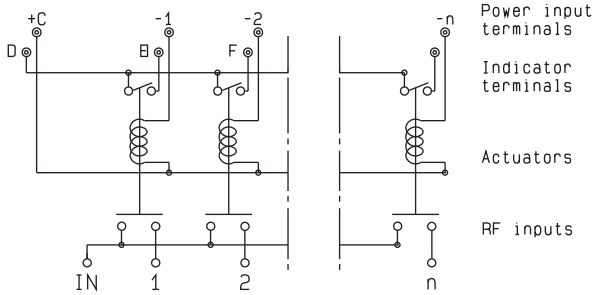

WITH POSITIVE COMMON AND SUPPRESSION DIODES
R573 -0- -4- / R574 -0- -4-

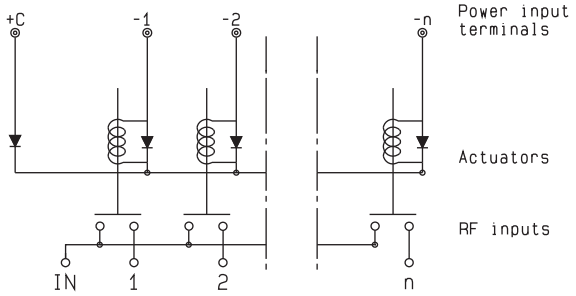

WITH POSITIVE COMMON, SUPPRESSION DIODES AND INDICATOR CONTACT
R573 -1- -4- / R574 -1- -4-

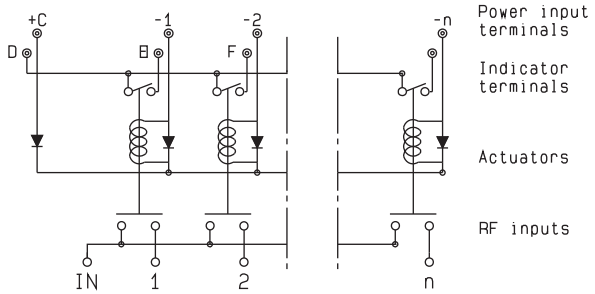

Technical data sheets are available on : ***www.radiall.com***
For more technical information, consult us / E-mail : ***USA : rfswitchusa@radiall.com / Rest of the world : switchingproducts@radiall.com***

COAXIAL ELECTRICAL SCHEMATICS
R573 & R574 series

LATCHING

WITHOUT OPTION
R573 -2- -0- / R574 -2- -0-

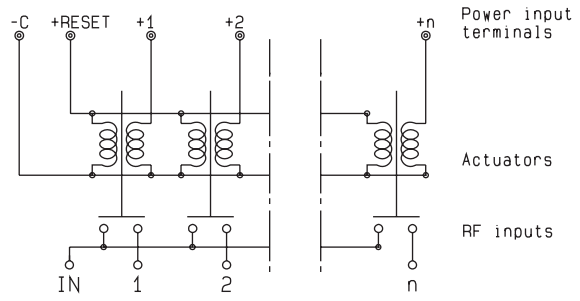

WITH INDICATOR CONTACT
R573 -3- -0-/ R574 -3- -0-

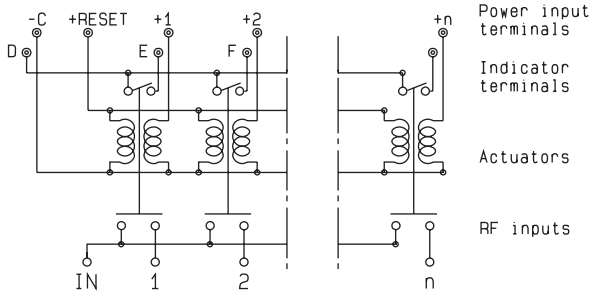

WITH SUPPRESSION DIODES
R573 -2- -3- / R574 -2- -3-

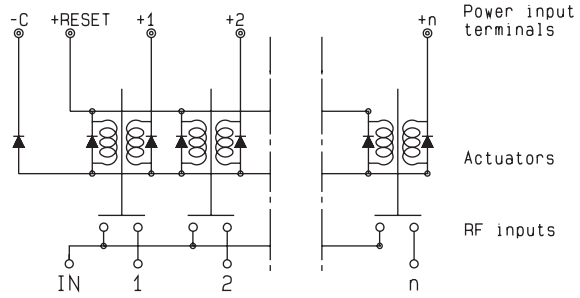

WITH SUPPRESSION DIODES AND INDICATOR CONTACT
R573 -3- -3- / R574 -3- -3-

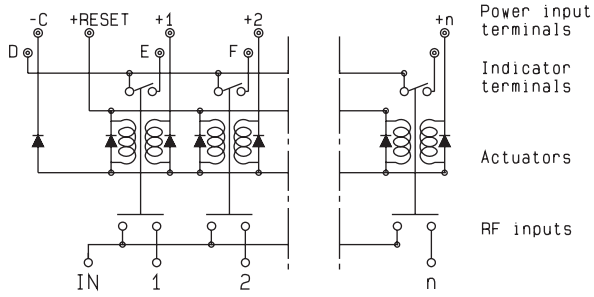

WITH TTL DRIVER
(suppression diodes are included)
R573 -2- -2- / R574 -2- -2-

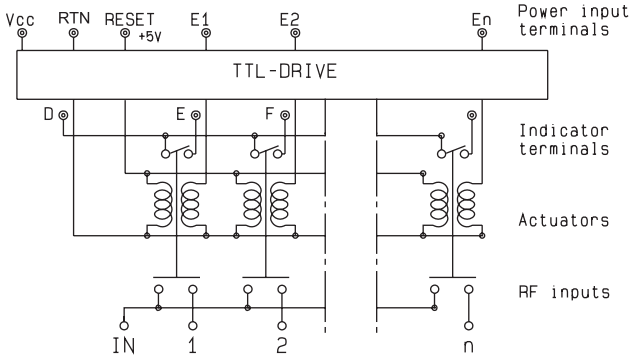

WITH TTL DRIVER AND INDICATOR CONTACT
(suppression diodes are included)
R573 -3- -2- / R574 -3- -2-

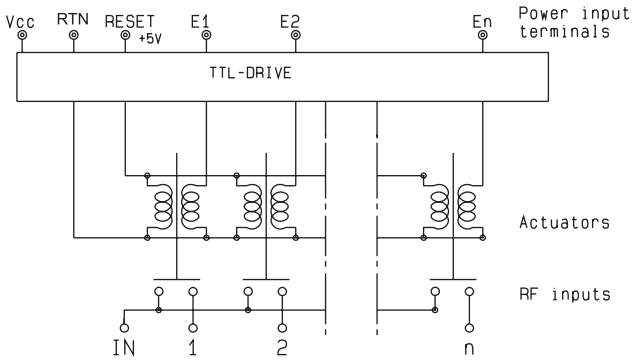

Technical data sheets are available on : ***www.radiall.com***
For more technical information, consult us / E-mail : ***USA : rfswitchusa@radiall.com / Rest of the world : switchingproducts@radiall.com***

COAXIAL ELECTRICAL SCHEMATICS
R573 & R574 series

LATCHING

WITH CUT-OFF
(suppression diodes are included)
573 -4- -0- / R574 -4- -0-

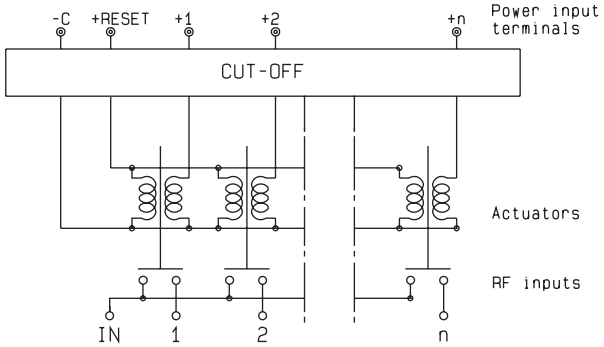

WITH CUT- OFF AND INDICATOR CONTACT
(suppression diodes are included)
573 -5- -0- / R574 -5- -0-

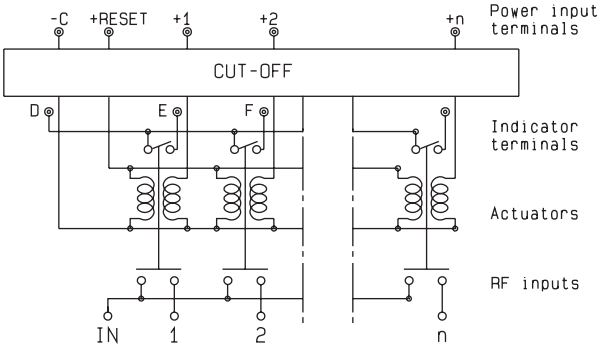

WITH CUT-OFF AND AUTO RESET
(Suppression diodes are included
R573 -8- -0- / R574 -8- -0-

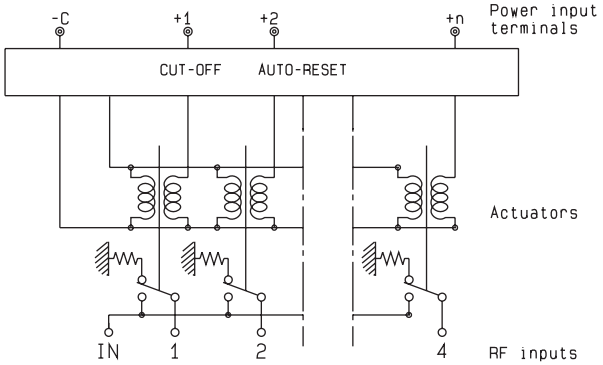

WITH CUT-OFF, AUTO RESET AND INDICATOR CONTACT
(Suppression diodes are included)
R573 -9- -0- / R574 -9- -0-

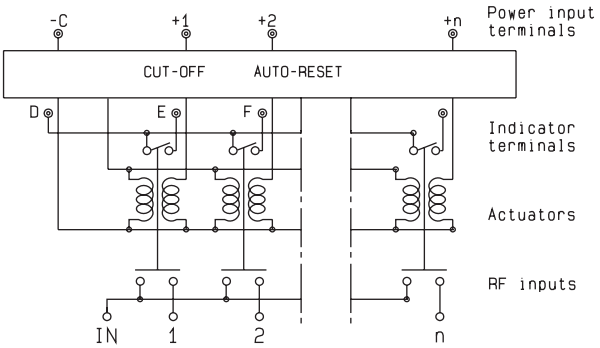

WITH TTL DRIVER AND CUT- OFF
(Suppression diodes are included)
R573 -4- -2- / R574 -4- -2-

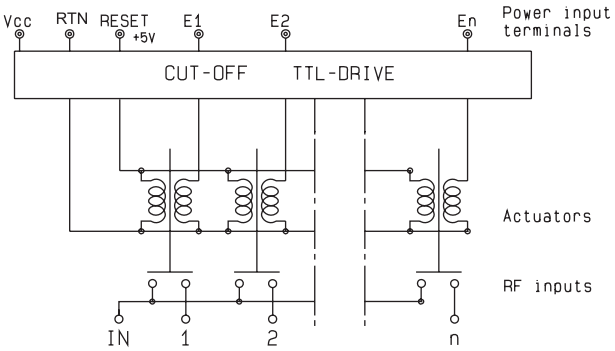

WITH TTL DRIVER, CUT-OFF AND INDICATOR CONTACT
(Suppression diodes are included)
R573 -5- -2- / R574 -5- -2-

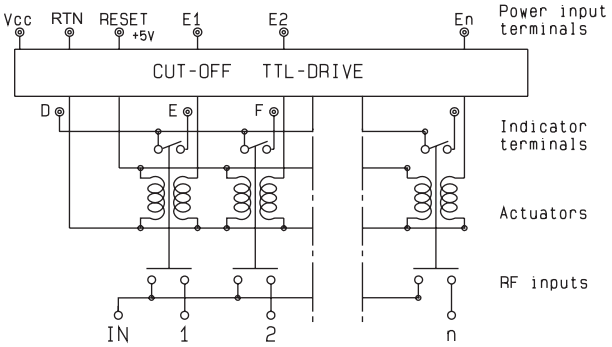

Technical data sheets are available on : ***www.radiall.com***
For more technical information, consult us / E-mail : ***USA : rfswitchusa@radiall.com / Rest of the world : switchingproducts@radiall.com***

COAXIAL SPnT - ELECTRICAL SCHEMATICS
R573 & R574 series

LATCHING

WITH TTL DRIVER, CUT-OFF AND AUTO RESET
(Suppression diodes are included)
R573 -8- -2- / R574 -8- -2-

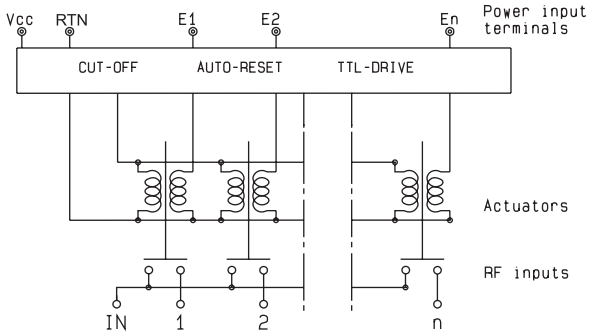

WITH TTL DRIVER, CUT-OFF, AUTO RESET AND INDICATOR CONTACT
(Suppression diodes are included)
R573 -9- -2-/ R574 -9- -2-

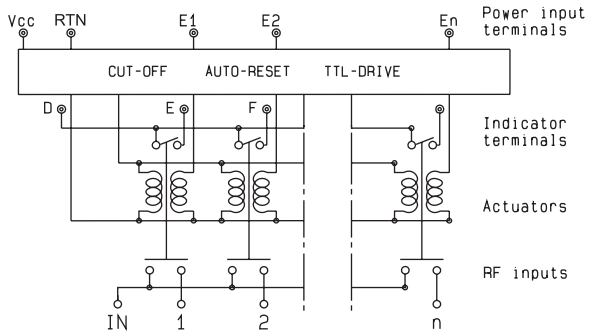

WITH CUT-OFF, FORCED OR AUTO RESET, BCD DRIVER, TTL COMPATIBLE
(Suppression diodes are included)
R573 -8- -8- / R574 -8- -8-

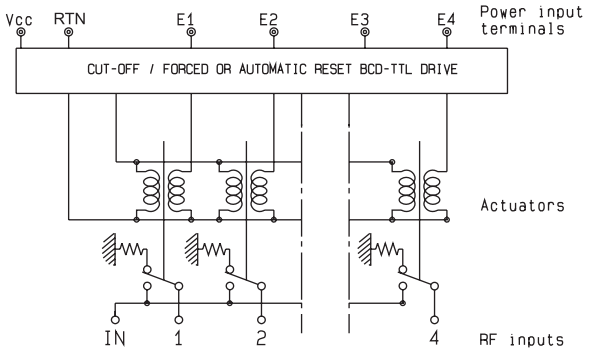

WITH CUT-OFF, FORCED OR AUTO RESET, BCD DRIVER, TTL COMPATIBLE AND INDICATOR CONTACT
(Suppression diodes are included)
R573 -9- -8- / R574 -9- -8-

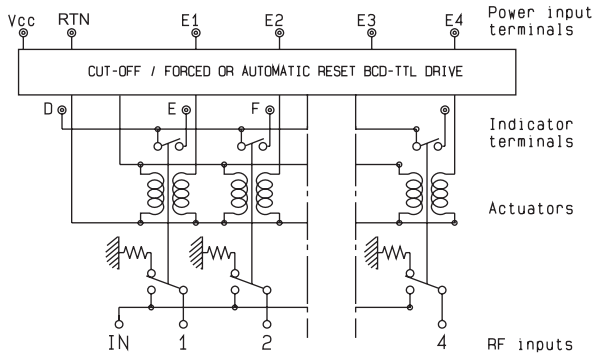

WITH POSITIVE COMMON
R573 -2- -1- / R574 -2- -1-

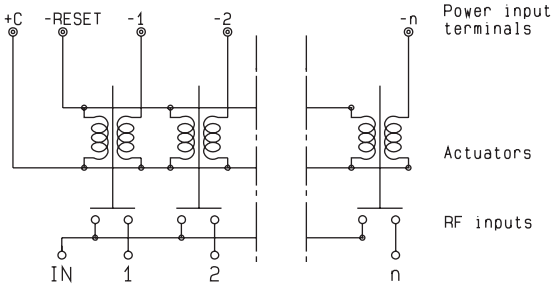

WITH POSITIVE COMMON AND INDICATOR CONTACT
(suppression diodes are included)
R573 -3- -1- / R574 -3- -1-

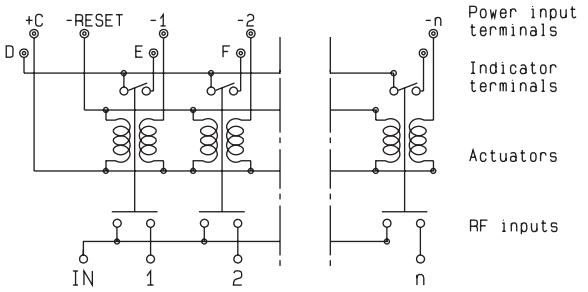

Technical data sheets are available on : ***www.radiall.com***
For more technical information, consult us / E-mail : ***USA : rfswitchusa@radiall.com / Rest of the world : switchingproducts@radiall.com***

LATCHING

WITH POSITIVE COMMON AND SUPPRESSION DIODES
(suppression diodes are included)
573 -2- -4- / R574 -2- -4-

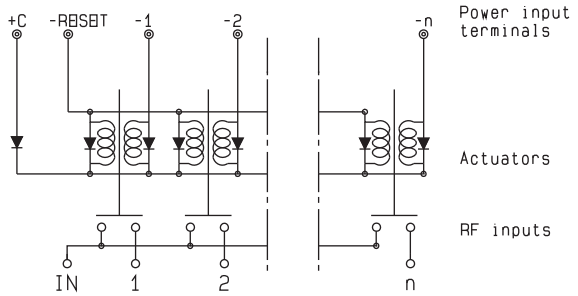

WITH POSITIVE COMMON, SUPPRESSION DIODES AND INDICATOR CONTACT
573 -3- -4- / R574 -3- -4-

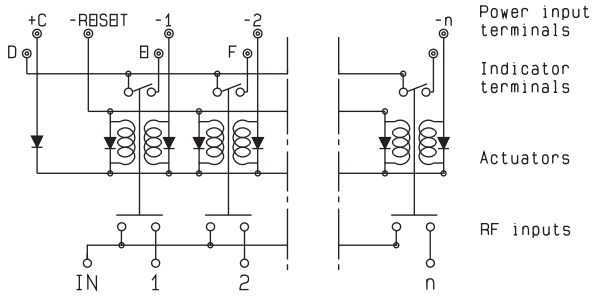

OPTIONAL FEATURES FOR SPnT

Examples of dedicated application options (Continued)

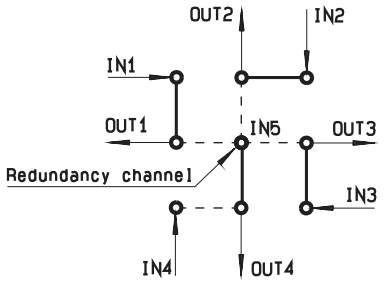

5P4T with redundancy channel on Out 4
In1 to Out 1, In2 to Out 2, In 3 to Out 3

7P6T

SP6T terminated with External terminations

A Custom Matrix Switch (5P4T) with 4 Input ports and 4 Output ports configured for 4 transmission systems and one redundancy channel (N+1 : N type). This product can be used also as a SP4T Terminated with external low VSWR or medium power terminations.

Technical data sheets are available on : ***www.radiall.com***
For more technical information, consult us / E-mail : ***USA : rfswitchusa@radiall.com / Rest of the world : switchingproducts@radiall.com***

OPTIONAL FEATURES for SPnT

Examples of dedicated application options

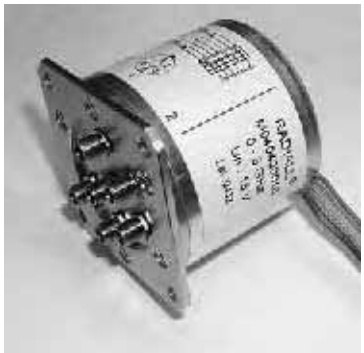

A SPnT with a flat ribbon cable for an easy mounting when space is reduced.

A SPnT with a specific bracket for an easy mounting in an Automatic Test Equipment

Based upon our know-how for Space application, this SPnT has been designed for thermal vaccum application.

This SP3T (based upon our know-how for space activity) has been designed for airborne military application (sequential access and severe environmental characterics)

This Subminiature SPnT has been improved for automatic test benches where very low RF leakage is needed.

A miniature SP6T with a D-Sub connector instead of Solder pins